RW Series
Sub-miniature Rotary Switches

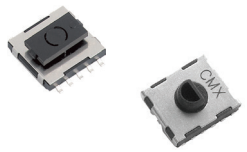

Features/Benefits

- *8 and 10 positions*
- *SMT version*
- *Subminiature design*

Typical Applications

- *Digital cameras*
- *Audio & visual equipment*
- *Consumer electronics*
- *Selector dial interface*

PART NUMBER	PACKAGING
RW-108 NS RT	800 pieces per reel

Specifications

CONTACT ARRANGEMENT: 1 Pole 8 Position
CONTACT RATING: 0.1 A @ 16 V DC.
ELECTRICAL LIFE: 10,000 cycles.
INITIAL CONTACT RESISTANCE: 100 mΩ max.
INSULATION RESISTANCE: 10M Ω min.
DIELECTRIC STRENGTH: 100V (50-60 Hz).
TWIST FORCE: 150 ± 100 gf
OPERATING TEMPERATURE: -20ºC to 70ºC

Materials

KNOB: PA (UL 94V-0).
COVER: SUS
HOUSING: PA (UL94V-0)
TERMINAL: Silver plated.

NOTE: Specifications and materials listed above are for switches with standard options. For information on specific and custom switches, consult Customer Service Center.

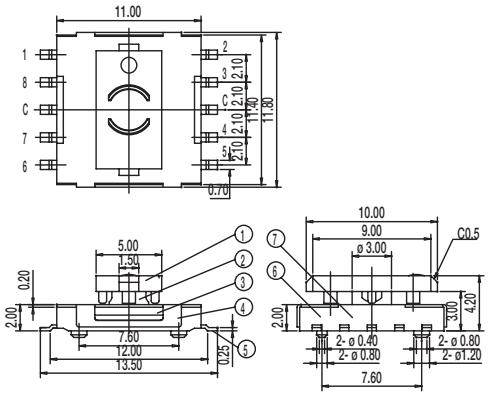

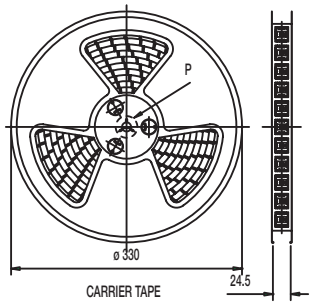

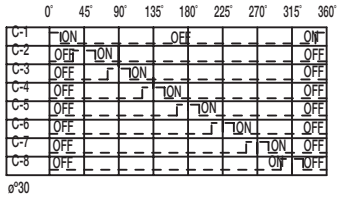

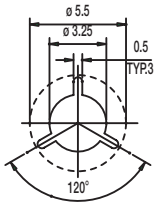

P DETAIL 1:1

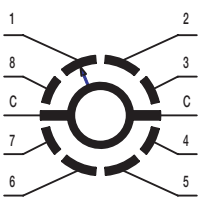

SCHEMATIC

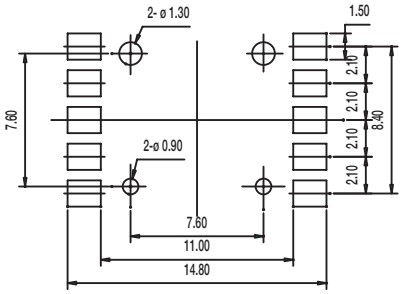

PIERCING PLAN

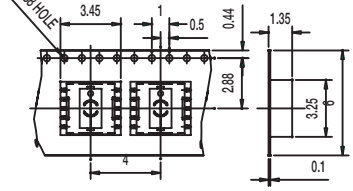

Dimensions are shown: mm
Specifications and dimensions subject to change

PART NUMBER	PACKAGING
RW-1106-NS RT	2,000 pieces per reel

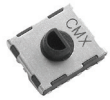

Specifications

CONTACT ARRANGEMENT: 1 Pole, 10 Position
CONTACT RATING: 10 mA @ 5 V DC.
ELECTRICAL LIFE: 7,000 cycles.
INITIAL CONTACT RESISTANCE: 200 mΩ max.
INSULATION RESISTANCE: 250M Ω min.
DIELECTRIC STRENGTH: 250 VAC (50-60 Hz).
TWIST FORCE: 90 ± 15 gf
OPERATING TEMPERATURE: -30°C to 80°C

Materials

KNOB: PA (UL 94V-0).
COVER: Silver plated.
HOUSING: LCP (UL94V-0)
TERMINAL: Silver plated.

NOTE: Specifications and materials listed above are for switches with standard options. For information on specific and custom switches, consult Customer Service Center.

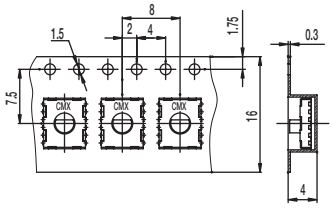

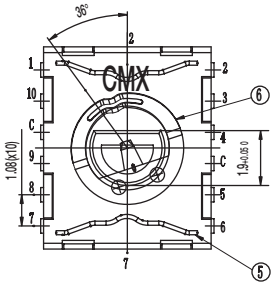

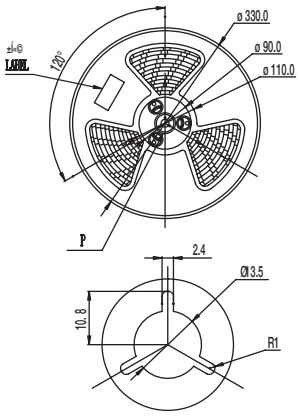

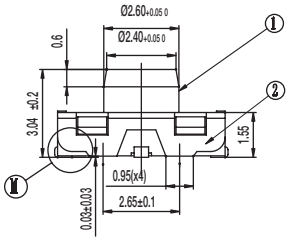

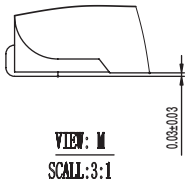

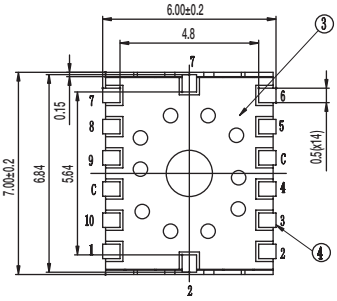

	0°	36°	72°	108°	144°	180°	216°	252°	288°	324°	360°
C-1	ON										ON
C-2	OFF	ON									OFF
C-3	OFF		ON								OFF
C-4	OFF			ON							OFF
C-5	OFF				ON						OFF
C-6	OFF					ON					OFF
C-7	OFF						ON				OFF
C-8	OFF							ON			OFF
C-9	OFF								ON		OFF
C-10	OFF									ON	ON

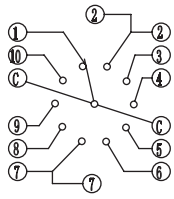

Circuit Diagram

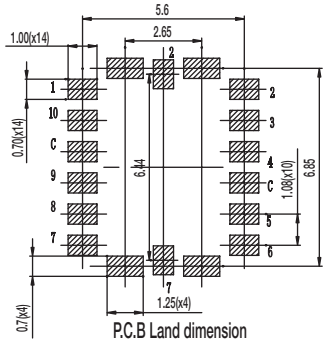

P.C.B Land dimension

VIEW: M
SCALE:3:1

VIEW:P