REV.	DATE	DESCRIPTION
A	03/27/05	UPDATE DRAWING FORMAT
B	02/25/08	REVISE PART DESCRIPTION

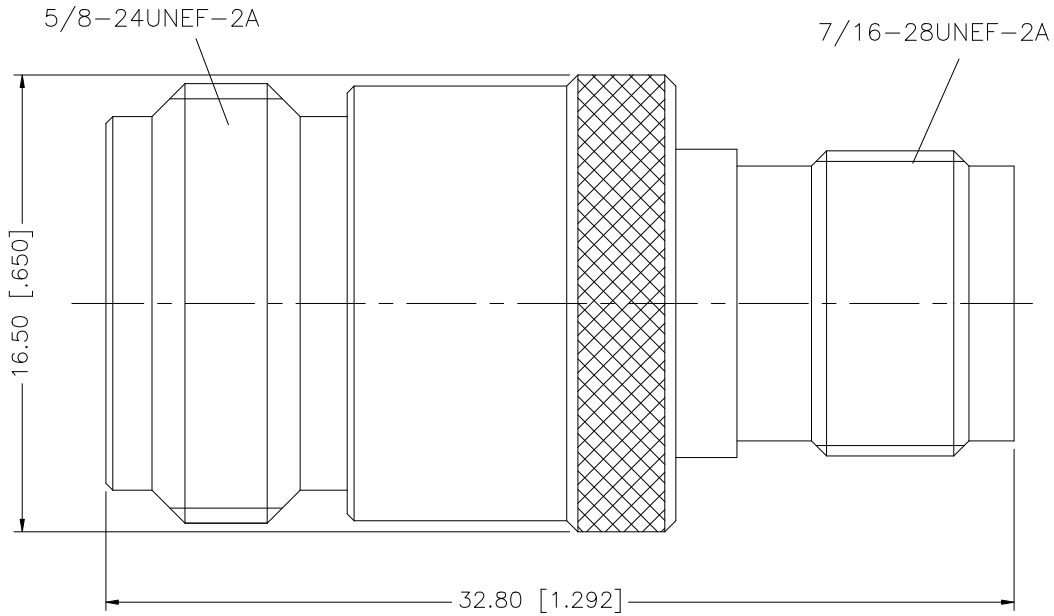

	DESCRIPTION	MATERIAL	FINISH	QTY
8				
7				
6				
5				
4	GASKET	SILICONE	RED	1
3	CONTACT PIN	PHOS. BRONZE	GOLD	1
2	INSULATOR	PTFE	NATURAL	1
1	BODY	BRASS	NICKEL	1

UNLESS OTHERWISE SPECIFIED DIMENSIONS ARE IN MILLIMETERS. DIMENSIONS IN [ ] ARE IN INCHES AND FOR CUSTOMER REFERANCE ONLY.

UNLESS OTHERWISE SPECIFIED TOLERANCES FOR MILLIMETERS ARE:
0.5 – 8mm ± 0.20mm
8 – 30mm ± 0.40mm
30 – 120mm ± 0.50mm

UNLESS OTHERWISE SPECIFIED TOLERANCES FOR INCHES ARE:
.020 – .315 = ± 0.007"
.315 – 1.180 = ± 0.015"
1.180 – 4.724 = ± 0.020"

DO NOT SCALE DRAWING

APPROVALS		DATE
DRAWN	G.R.S.	02/25/08
CHECKED		
ISSUED		
SHEET	1 OF 1	
CAD FILE	C:/242/242132.DWG	

Amphenol Connex

PART DESCRIPTION: N JACK TO TNC JACK ADAPTER

PART NO. 242132

DWG. NO.	REV.	SIZE	SCALE
242132.DWG	B	A	NA