TECHNICAL SPECIFICATIONS

1: MATERIAL:
INSULATOR : High Temperature Thermoplastics
CONTACTS : Copper alloy
SHELLS : Steel with Nickel Plated

2: PLATING:
CONTACT ACTIVE ZONE : GOLD or Equivalent
TERMINATION ZONE : TIN over Cu
METAL BRACKET : BRASS- Nickel
LIF HARPOON : BRASS- TIN
CLINCH NUT : BRASS- Nickel

3: ELECTRICAL DATA:
Current Rating : 48V/24A for Power contact
: 0.375 A for signal contact
Test Voltage : 1000V
Contact Resistance : For Power contacts-∠10mOhm
: For Signal conatcts -∠25mOhm
Insulation Resistance: 5000M Ohm
Electrical continuity between shell and harpoon

4: ENVIRONMENTAL CHARACTERISTICS- ROHS Compatible

Operating temperature : 70°C+30°C Temperature rise
5.MECHANICAL LIFE : 200 matings

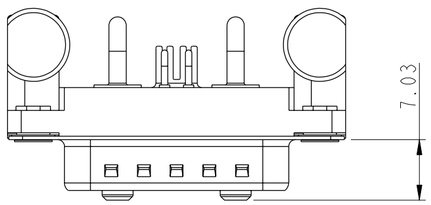

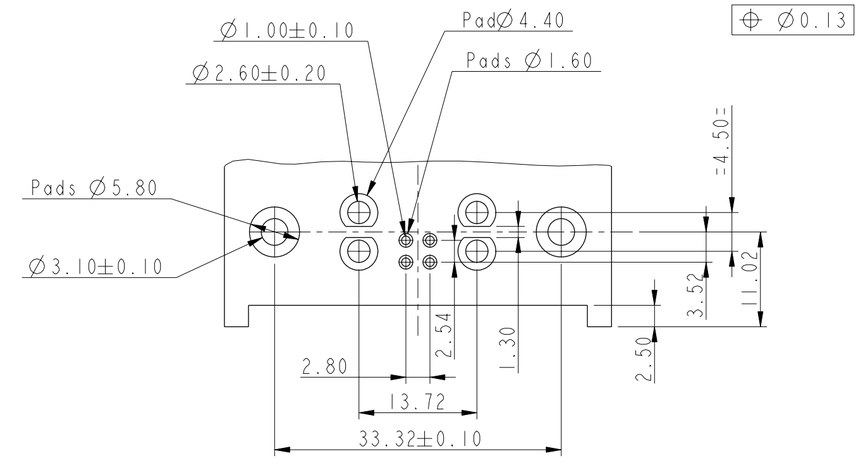

PCB HOLE DETAILS
(PCB THICKNESS-1.60mm)

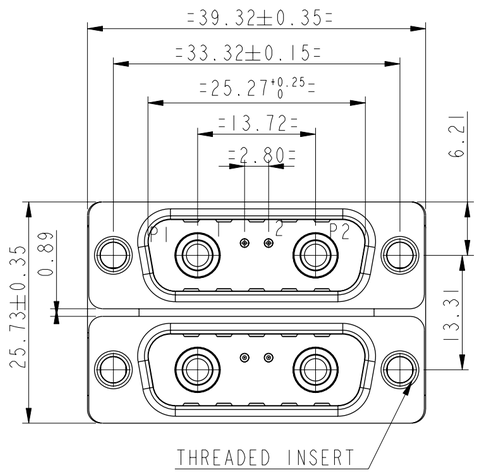

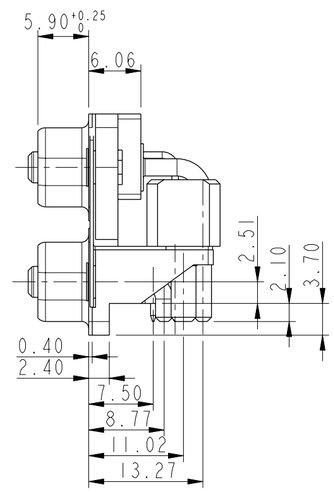

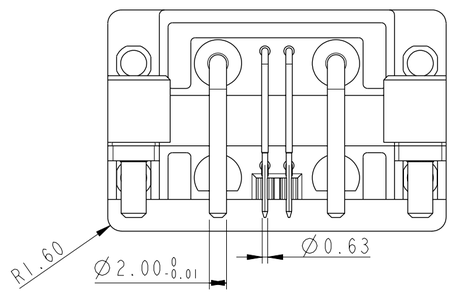

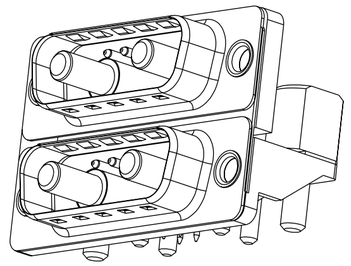

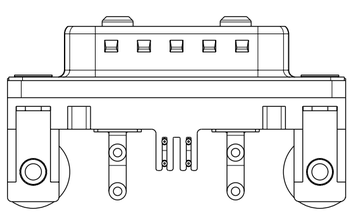

"This Product Meets European union directives &other country regulations as described in GS-22-008"

The Housing will withstand exposure to 265° peak temperature for 30 sec in a convenction,infra-red or vapour reflow oven solder applications

Packing asper GS 14-1104

PART NO.10070158-00219XLF

X-440UNC Threaded Insert
L-M3 Threaded Insert

rev	ecn no	dr	date
A	107-0051	NG	2007-07-17
B	107-0163	NG	2007-11-30
C	108-0019	NG	2008-02-08
-	-	-	-
-	-	-	-
-	-	-	-
-	-	-	-

www.fciconnect.com

surface - ISO 1302 ✓ | tolerance std ISO 406 ISO 1101 | projection | mm

TOLERANCES UNLESS OTHERWISE SPECIFIED

Dr	NIRMAL.G	2006-10-20	ANGULAR	LINEAR	0.X	±0.30
Eng	NIRMAL.G	2007-11-29			0.XX	±0.10
Chr	ANISH S	2008-02-08	0° ±2°		0.XXX	±0.050
Appr	BIJU K PAUL	2008-02-08	Product family		-D-SUB	

size A2 | Scale 2:1 | ECN 107-0163 | Spec ref

title: DUAL PCB CONNECTOR-48V
MicroTCA_MALE PIP _ version

dwg no 10070158-002 | Rev. C

catalog no | CUSTOMER | sheet 1 of 1

Copyright FCI.

REV F - 2006-04-17