DUAL TRIP TEMPERATURE SWITCH IC (THERMOSTAT IC)

www.ablic.com

µ

Features

- − + +
- ±
- + +
  +
  − +
- µ +
-
-
-
-
- − +
- *1

*1. Product Name Structure

Applications

-
-
-
-
-

Packages

-
-

Block Diagrams

1. CMOS output product (Output type: Separate)

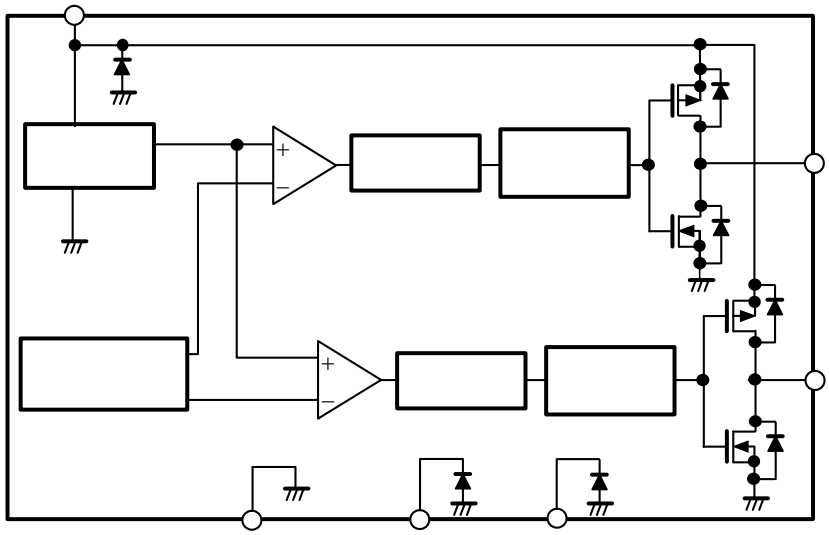

Figure 1

2. Nch open-drain output product (Output type: Separate)

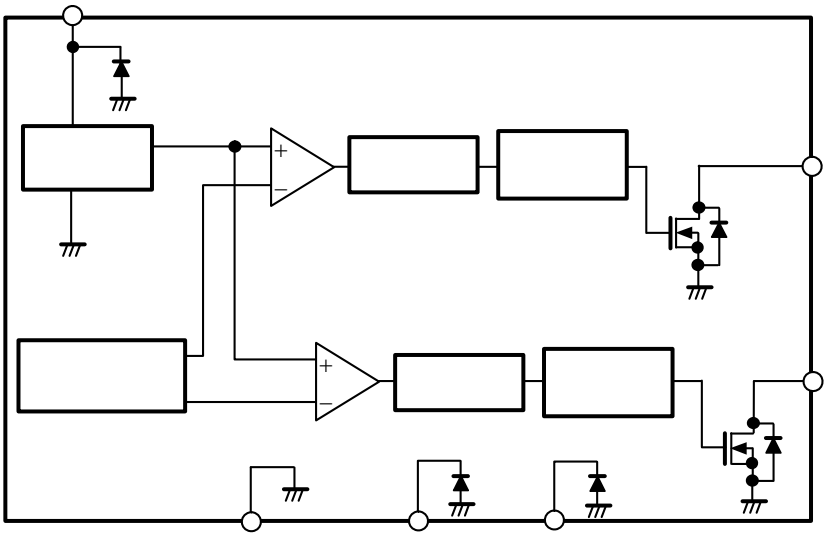

Figure 2

3. CMOS output product (Output type: Integrate)

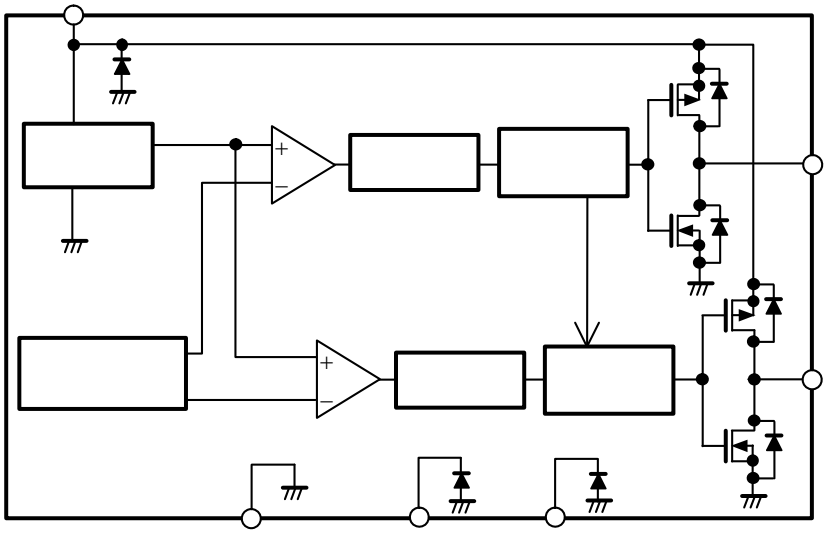

Figure 3

4. Nch open-drain output product (Output type: Integrate)

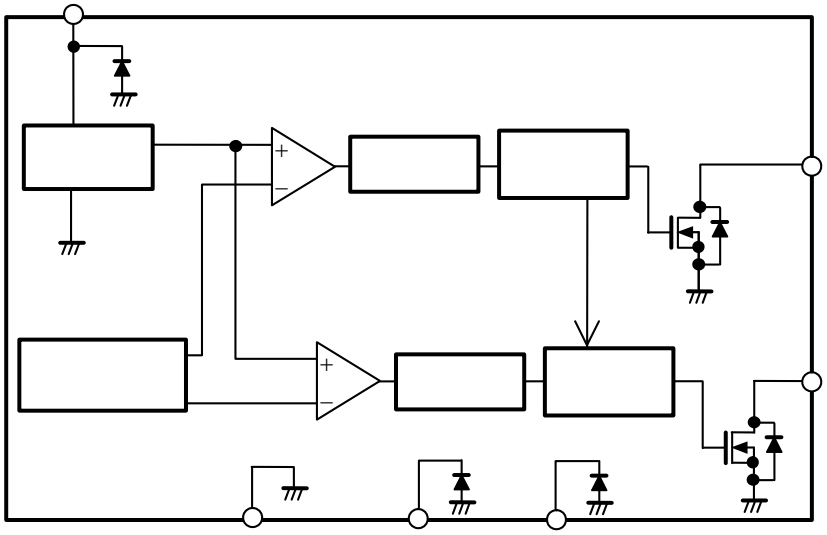

Figure 4

Product Name Structure

1. Product name

1. 1 SOT-23-6

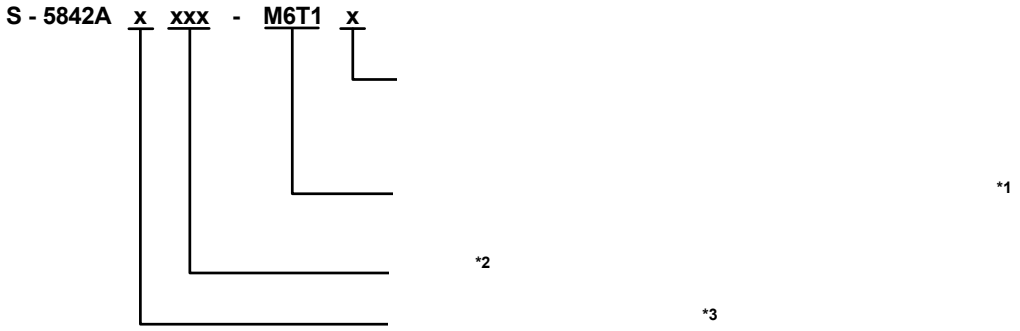

1. 2 SNT-6A

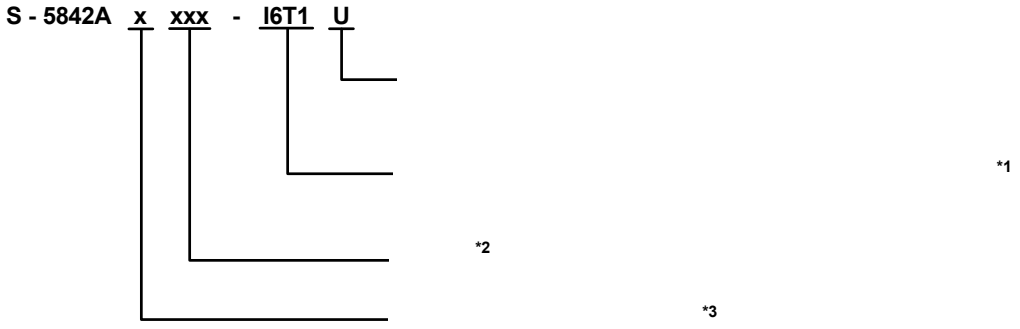

*1.
*2. Selection of Product Option
*3. Selection of Product Option

2. Packages

Table 1 Package Drawing Codes

				–

3. Product name list

3. 1 SOT-23-6

Table 2

			*1				*1		
		+ °	–	– °		+ °	± °	– °	
		+ °	–	– °		°	± °	+ °	
		+ °	± °	– °		°	–	+ °	
		+ °	–	– °		+ °	± °	– °	
		+ °	–	– °		°	± °	– °	

*1 ± °

Remark 1. Selection of Product
Option
2.
3.

3. 2 SNT-6A

Table 3

			*1				*1		
		+ °	± °	– °		°	–	+ °	
		+ °	–	– °		°	± °	+ °	
		+ °	–	+ °		– °	± °	– °	
		+ °	–	– °		°	± °	+ °	
		+ °	–	– °		+ °	± °	+ °	
		+ °	–	– °		+ °	± °	– °	
		+ °	–	– °		+ °	± °	– °	
		+ °	–	– °		+ °	± °	– °	
		+ °	–	– °		– °	± °	+ °	
		+ °	–	– °		°	± °	+ °	
		+ °	± °	– °		+ °	–	– °	
		+ °	± °	– °		+ °	–	– °	
		+ °	–	– °		°	± °	+ °	

*1 ± °

Remark **Selection of Product**
Option

Pin Configurations

1. SOT-23-6

Top view

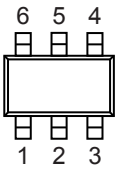

Figure 5

Table 4

	*1	
	*2	

***1.**

***2.**

2. SNT-6A

Top view

Figure 6

Table 5

	*1	
	*2	

***1.**

***2.**

Absolute Maximum Ratings

Table 6

+ °

		+	
		− +	
		− +	
		− +	
		*1	
		*1	
		− +	
		− +	

*1.

× ×

Caution The absolute maximum ratings are rated values exceeding which the product could suffer physical damage. These values must therefore not be exceeded under any conditions.

DC Electrical Characteristics

1. CMOS output product

Table 7

+ °

		+ +		−			
		+		−			
		− +		−			
*1		−	−		+		
*2	Δ		−	Δ	−		
*3			−	− − + +	−		
*3			−	− − + +	−		
					−		
					−		
					−		
					−		
			−			μ	

***1.**

± °

***2.** Δ −

Δ

Δ

Δ …

***3.** − − + +

[Fahrenheit ⇔ Celsius Conversion equation]

° ° − ×

° + ° ×

2. Nch open-drain output product

Table 8

+ °

		+ +		−			
		+		−			
		− +		−			
*1		−	−		+		
*2	Δ		−	Δ	−		
*3			−	− − + +	−		
*3			−	− − + +	−		
			−	−			
			−	−			
					−		
					−		
			−			μ	

***1.**

± °

***2.** Δ −

Δ

Δ

Δ …

***3.** − − + +

[Fahrenheit ⇔ Celsius Conversion equation]

° ° − ×

° + ° ×

AC Electrical Characteristics

Table 9

			−		−	μ	−

Test Circuits

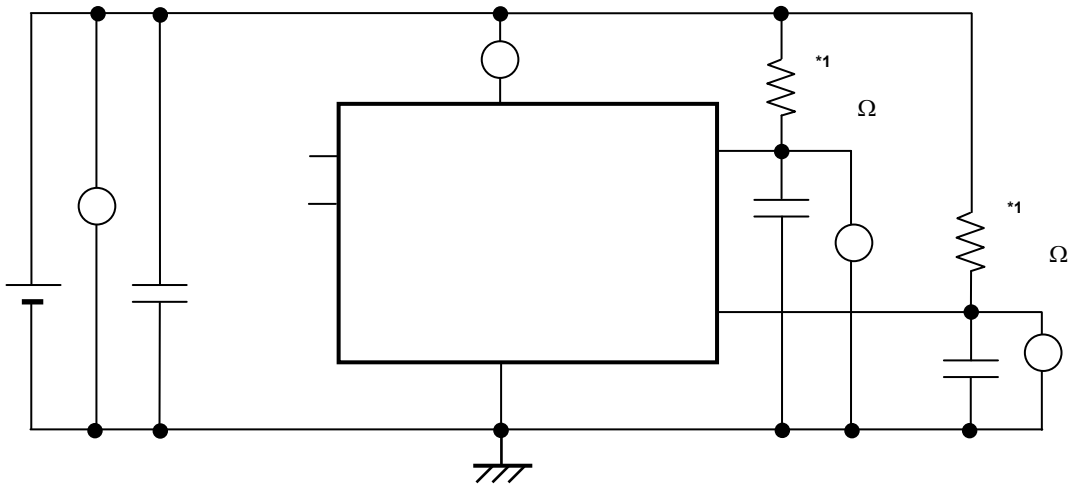

*1.

Figure 7 Test Circuit 1

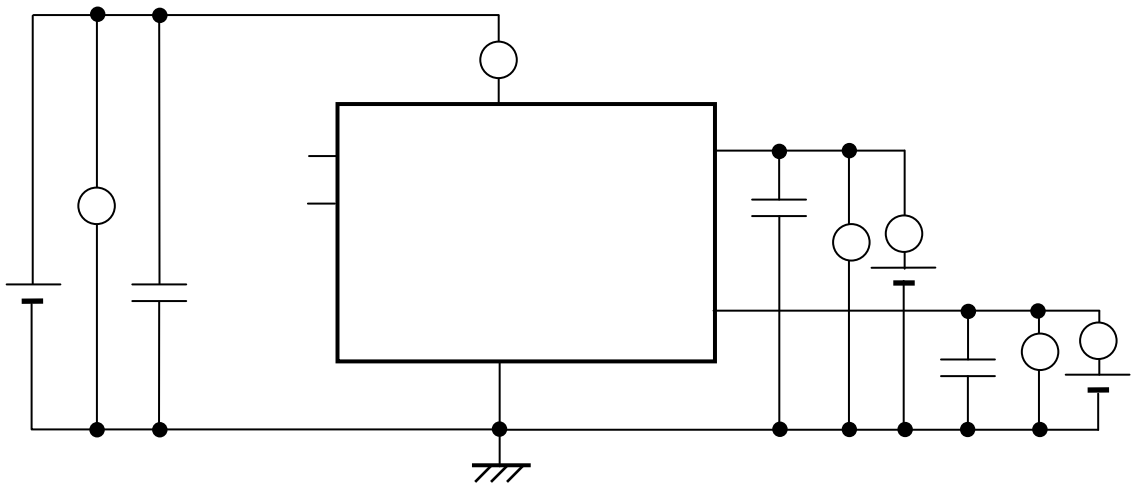

Figure 8 Test Circuit 2

Selection of Product Option

1. Description of product option

-
-

-

-

± *1

- + +
- − +
- Δ

Δ …

- + +
- +
- − +

*1 ± °

−

− + +

- −
- −
- +
- +

>

+ +

− −

- >
- >

+ +

- >
- >

2. Example of product spec

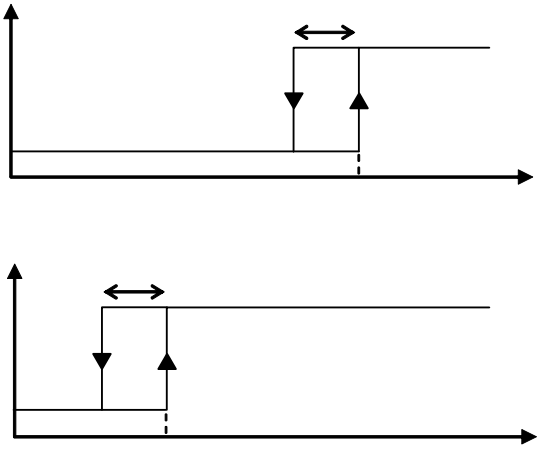

Figure 9 Operation for CMOS Output and Separate Type

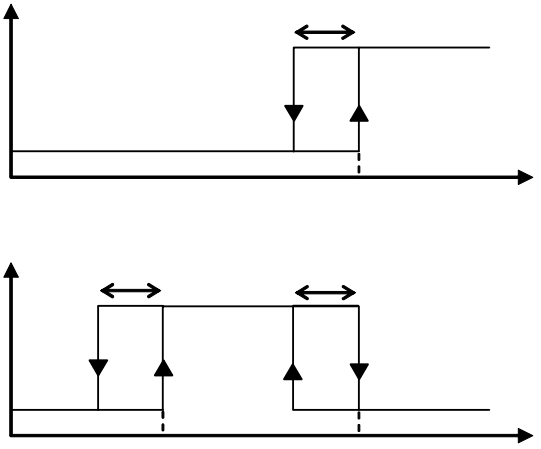

Figure 10 Operation for CMOS Output and Integrate Type

Operation

1. Separate type

Figure 11

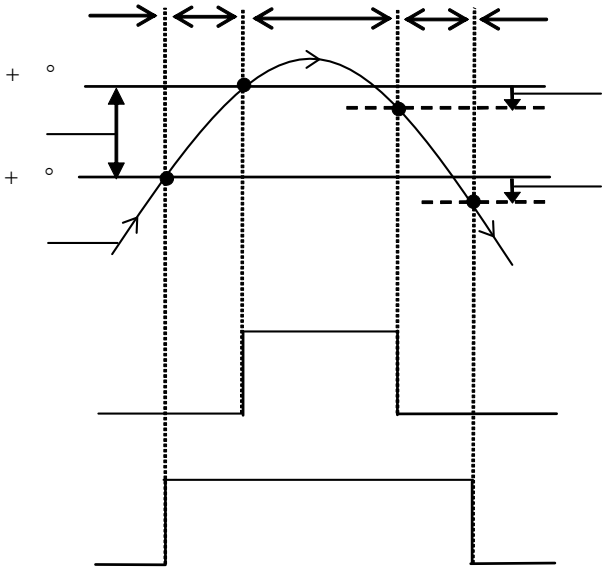

Figure 11 Timing Chart for CMOS Output and Separate Type

2. Integrate type

Figure 12

•
•

+
–

+
–

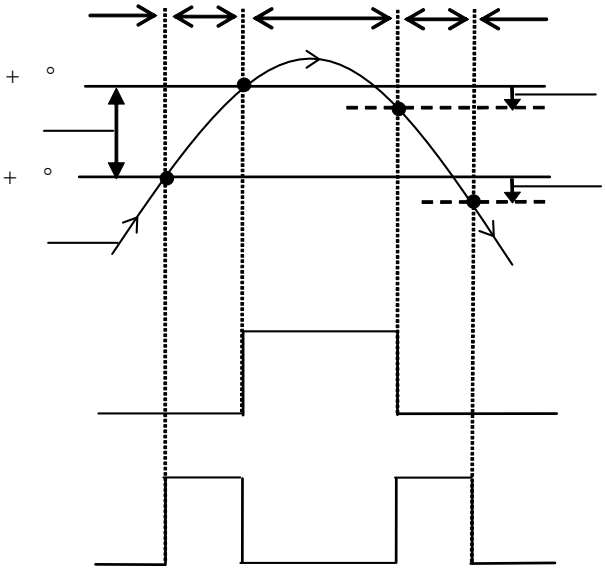

+ °

+ °

– °

– °

Δ + °

Figure 12 Timing Chart for CMOS Output and Integrate Type

<

+

+ < < +

>

+

+ + > > + +

<

+ +

3. Delay circuit

3. 1 The temperature is the detection temperature or less

3. 2 The temperature exceeds the detection temperature

Standard Circuit

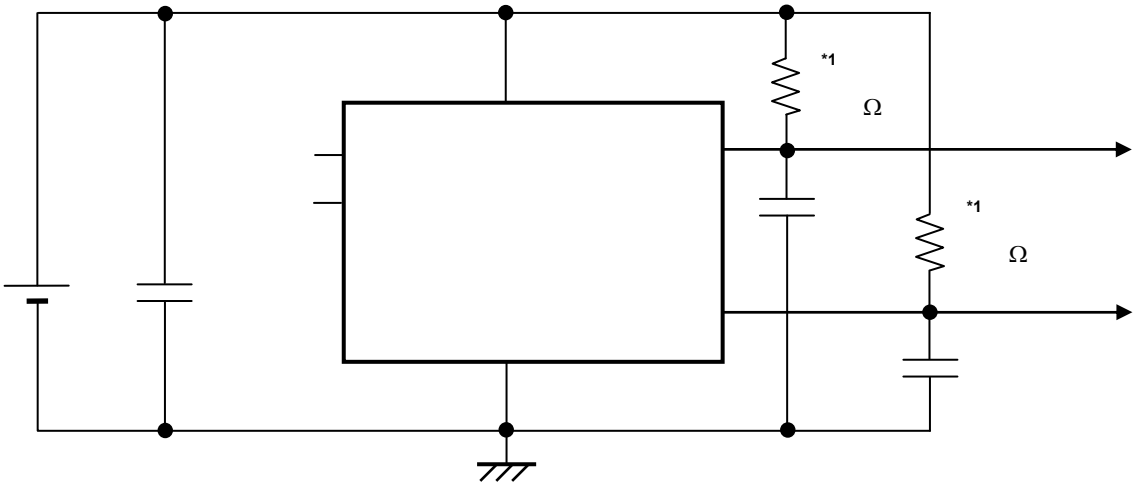

*1.

Figure 13

Caution The above connection diagram will not guarantee successful operation. Perform thorough evaluation using actual application to set the constant.

Precautions

- ± °
- μ
- μ
- >

Characteristics (Typical Data)

1. Current consumption during operation vs. Power supply voltage characteristics

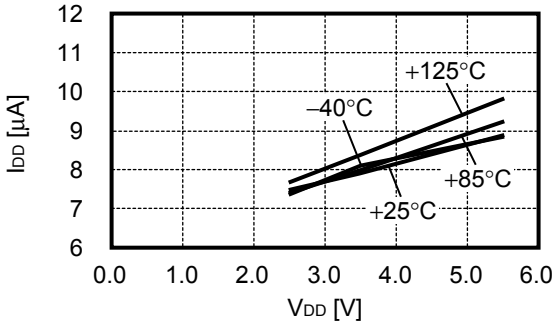

2. Output current "H" of DETH / DETL pin vs. Power supply voltage characteristics (CMOS output product only)

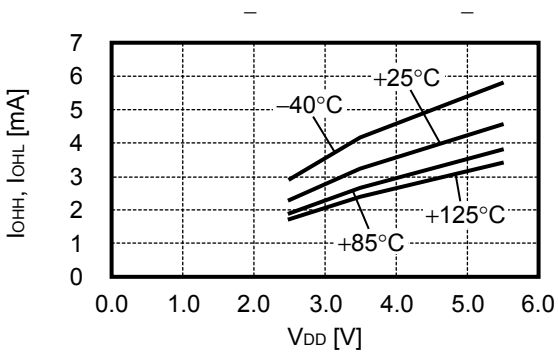

3. Output current "L" of DETH / DETL pin vs. Power supply voltage characteristics

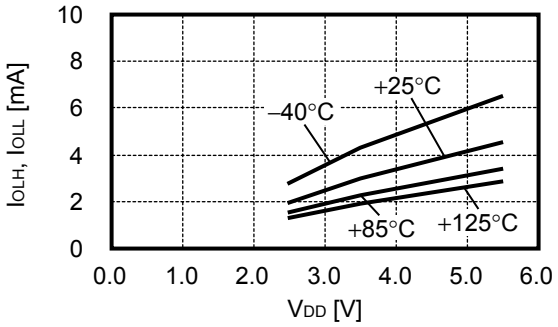

4. Noise suppression time vs. Power supply voltage characteristics

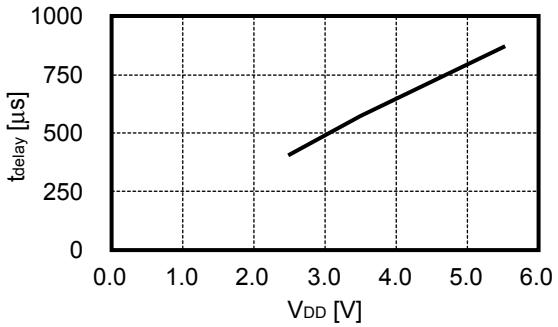

5. Response against heat (Output voltage vs. Time)

5. 1 When SNT-6A is put into the air of +100°C from the air of +25°C at t = 0 s

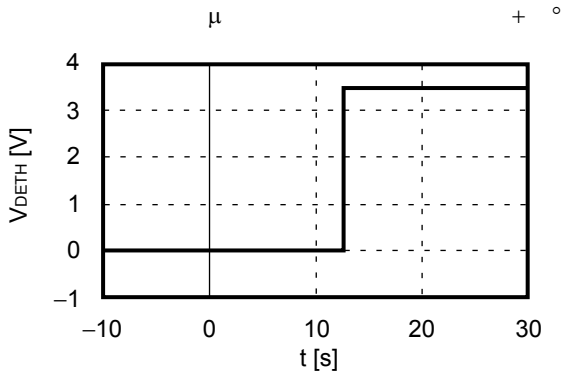

5. 2 When SNT-6A is put into the liquid of +100°C from the air of +25°C at t = 0 s

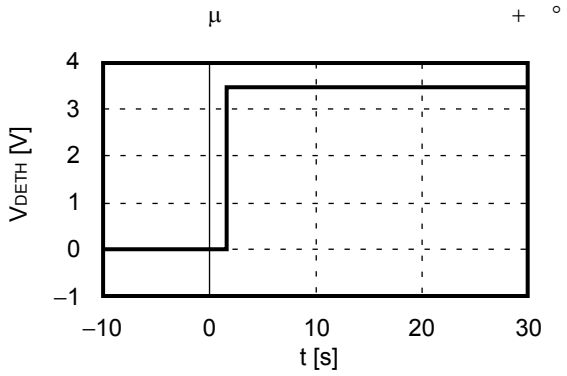

6. Response against startup

6. 1 Power-on at Ta = +25°C

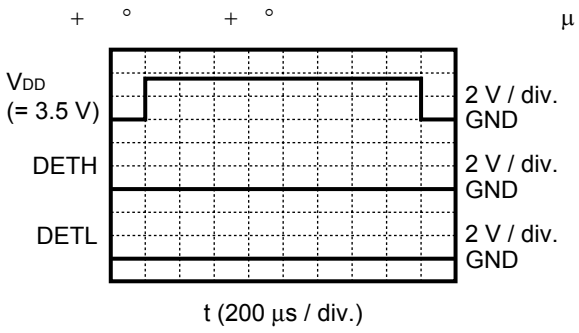

6. 2 Power-on at Ta = +80°C

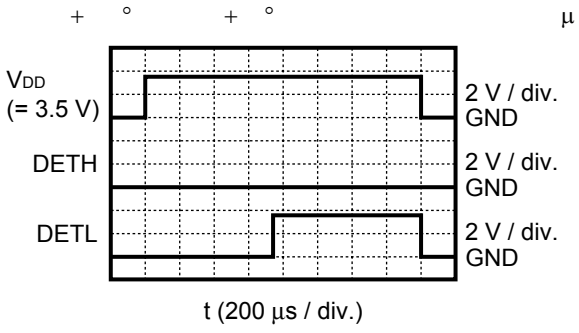

6. 3 Power-on at Ta = +120°C

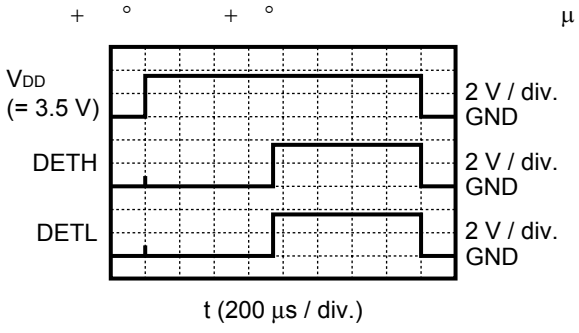

7. Accuracy of detection temperature

+ ° + °

7. 1 Accuracy of detection temperature at T_{DH} = +110°C (Higher accuracy)

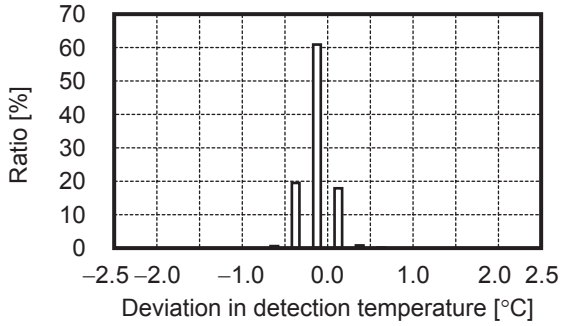

7. 2 Accuracy of detection temperature at T_{DL} = +45°C

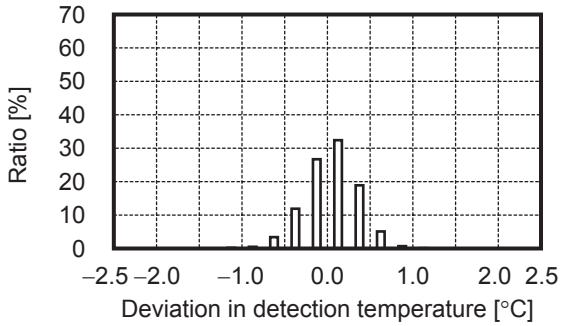

Marking Specifications

1. SOT-23-6

Top view

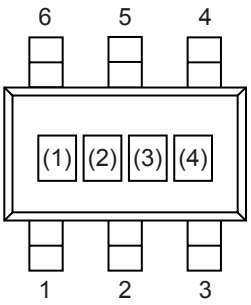

Product name vs. Product code

Product name vs. Product code

Remark 1.

2.

2. SNT-6A

Top view

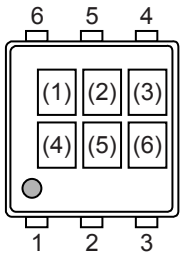

Product name vs. Product code

Product name vs. Product code

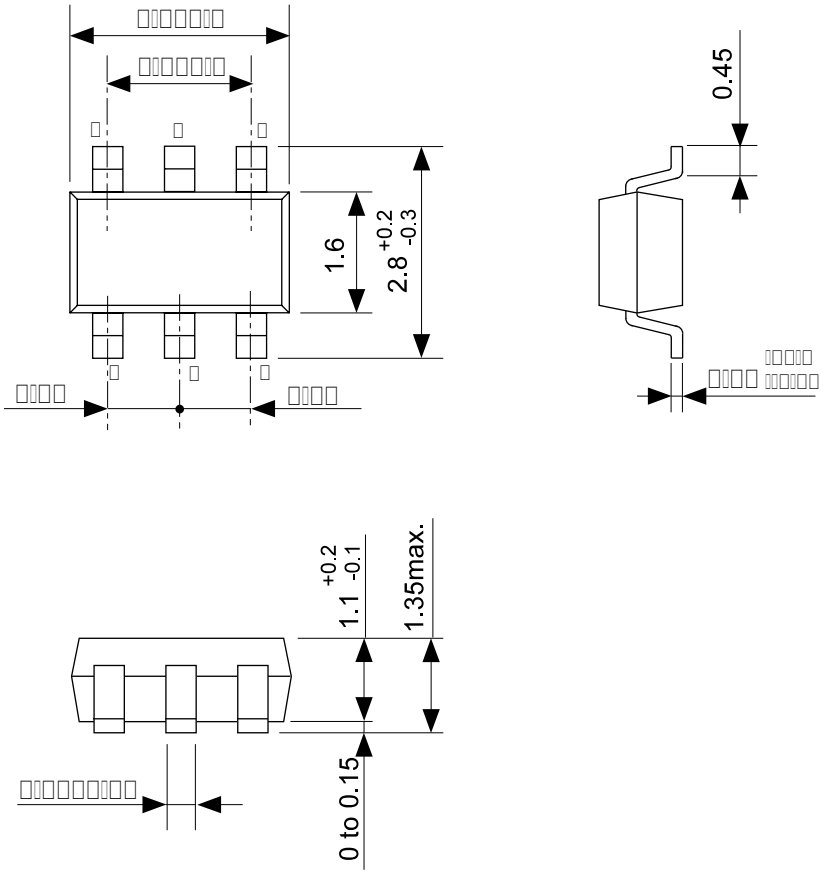

ABLIC Inc.

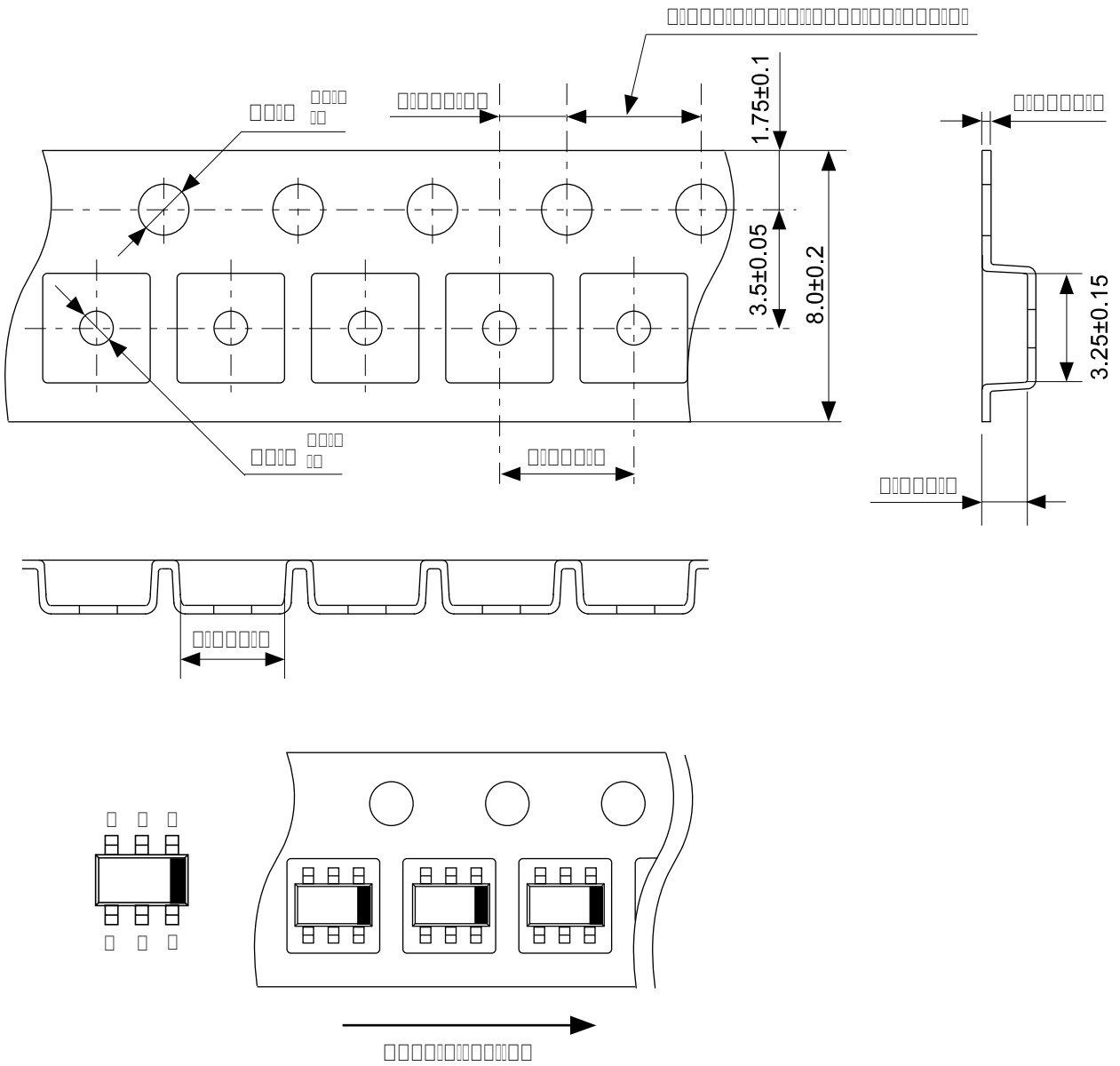

ABLIC Inc.

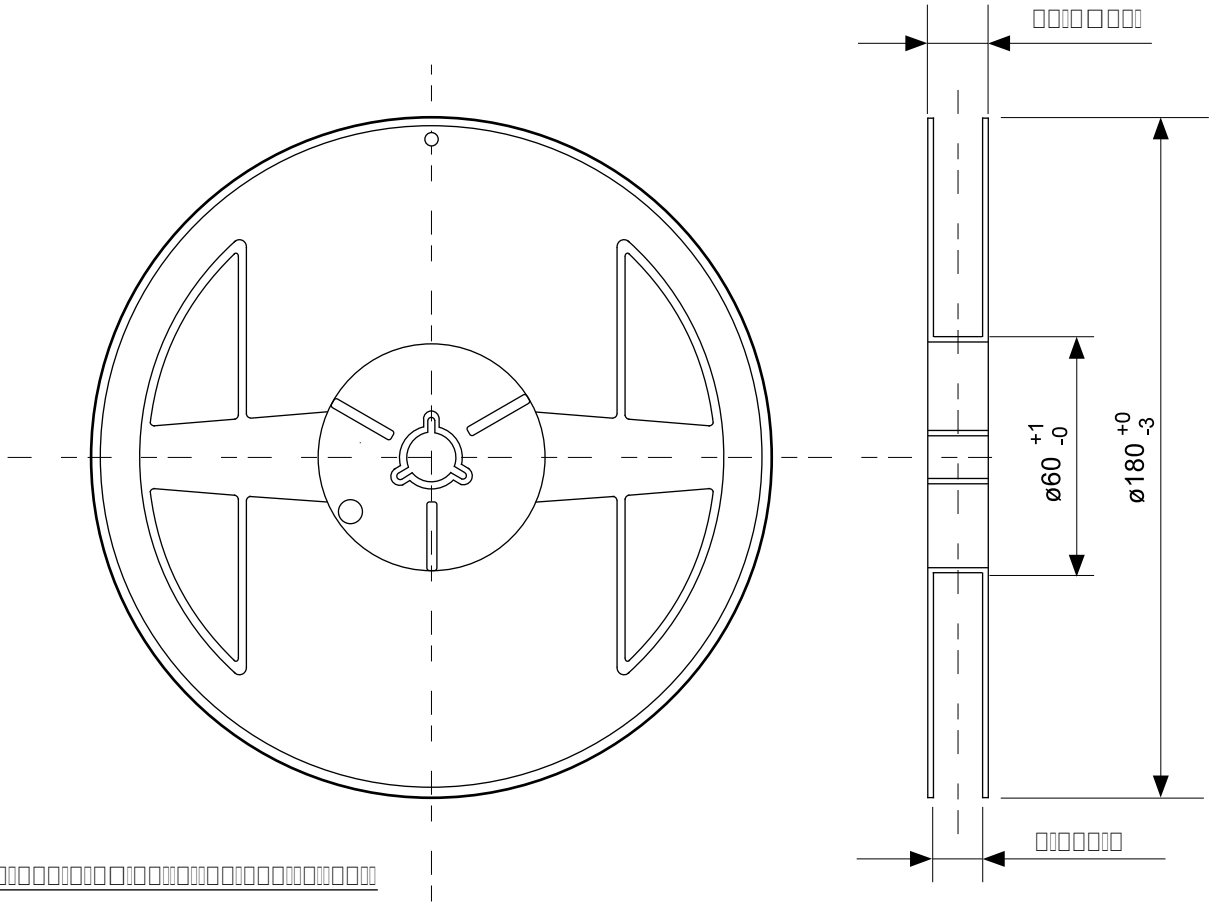

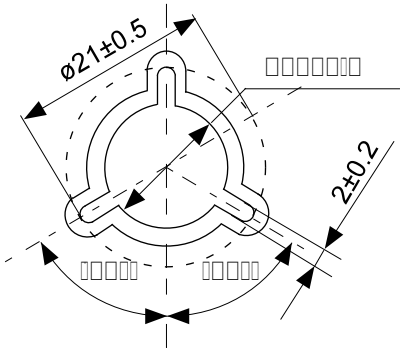

ABLIC Inc.

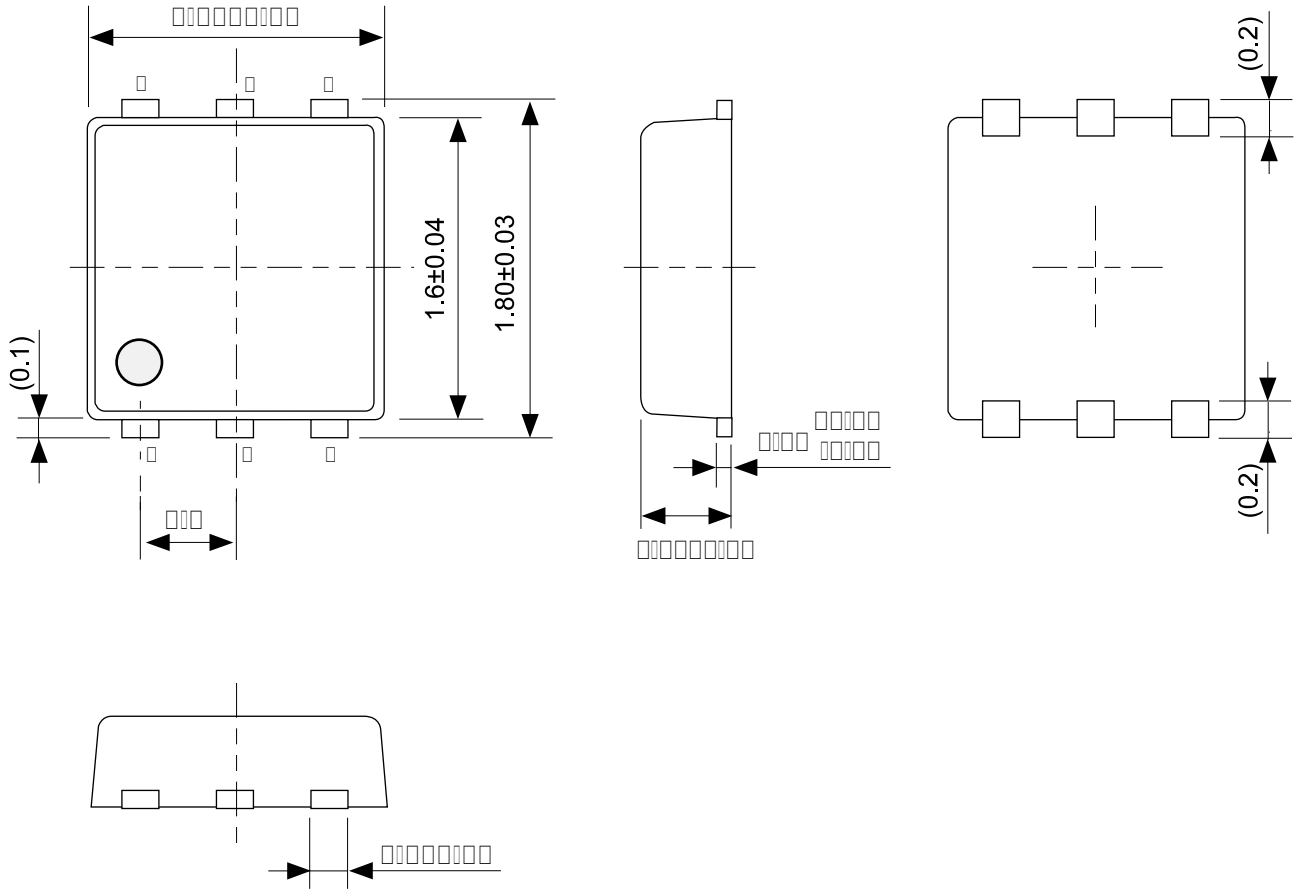

ABLIC Inc.

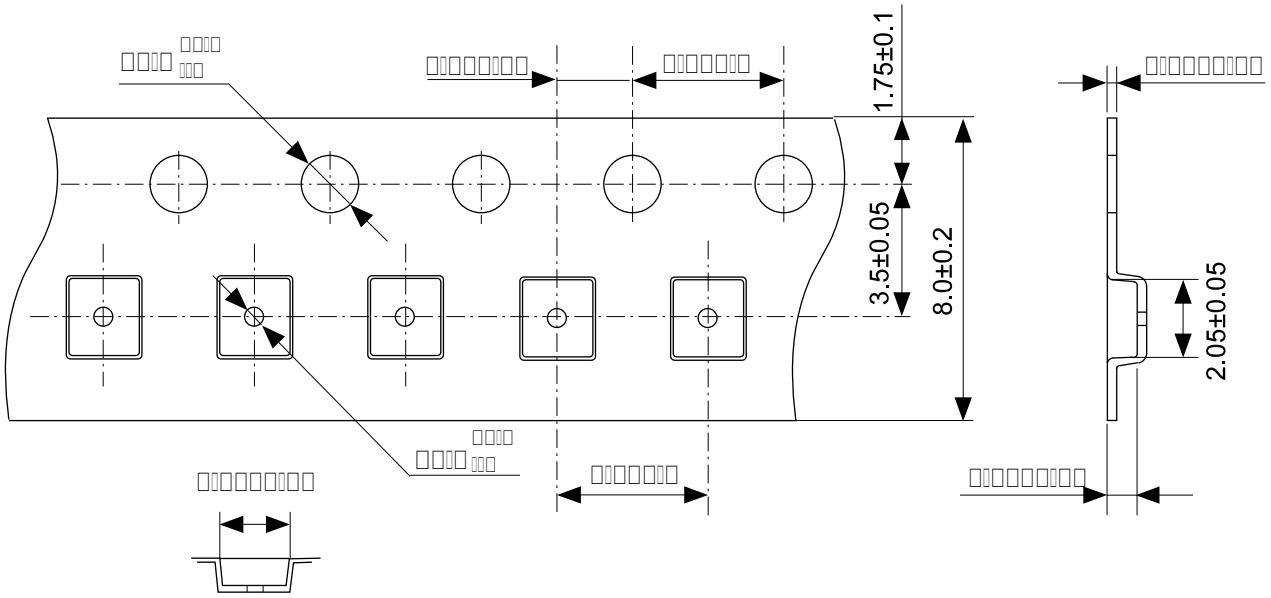

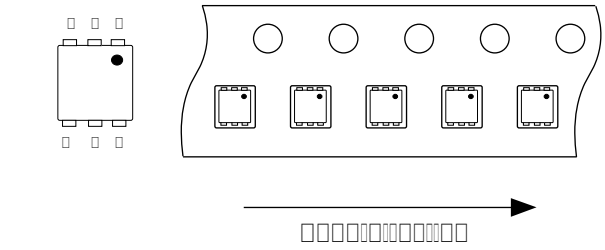

ABLIC Inc.

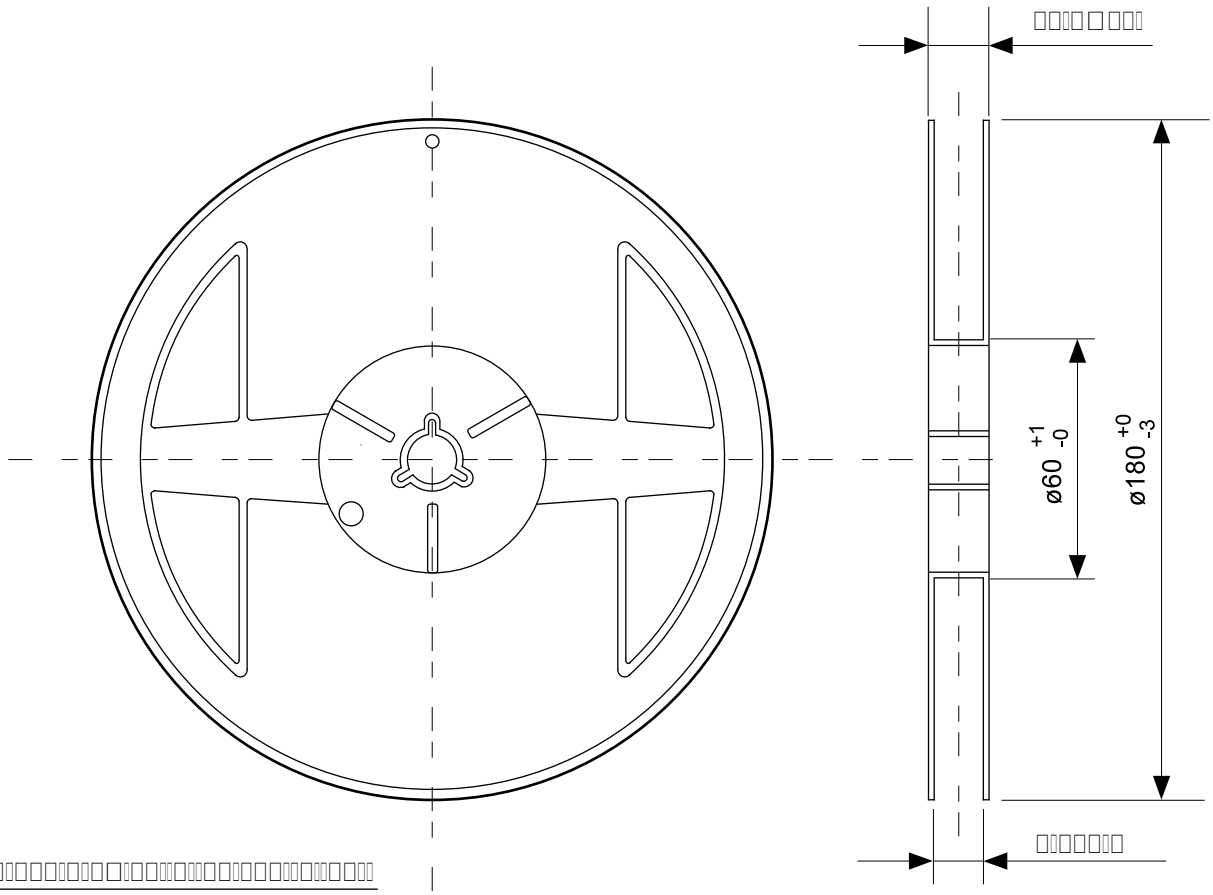

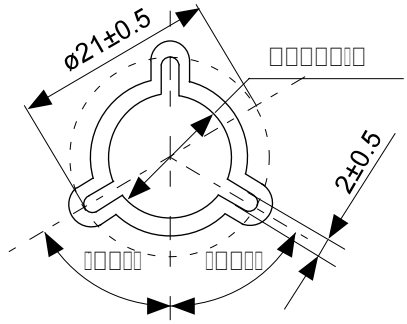

ABLIC Inc.

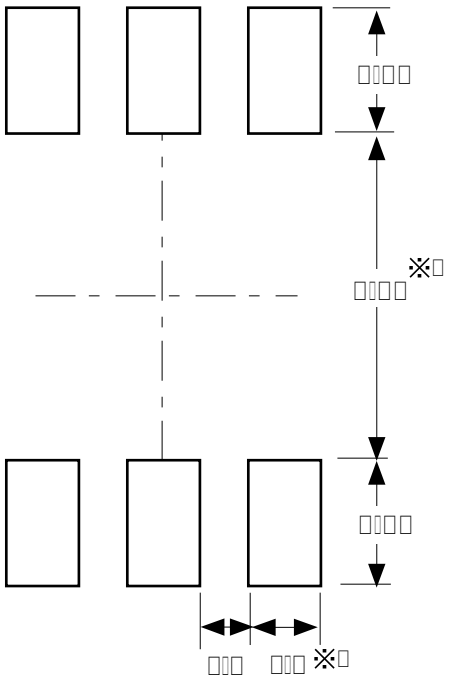

※□□ランドパターンの幅に注意してください □□□□

Disclaimers (Handling Precautions)

1. All the information described herein (product data, specifications, figures, tables, programs, algorithms and application circuit examples, etc.) is current as of publishing date of this document and is subject to change without notice.
2. The circuit examples and the usages described herein are for reference only, and do not guarantee the success of any specific mass-production design.
   ABLIC Inc. is not responsible for damages caused by the reasons other than the products described herein (hereinafter "the products") or infringement of third-party intellectual property right and any other right due to the use of the information described herein.
3. ABLIC Inc. is not responsible for damages caused by the incorrect information described herein.
4. Be careful to use the products within their specified ranges. Pay special attention to the absolute maximum ratings, operation voltage range and electrical characteristics, etc.
   ABLIC Inc. is not responsible for damages caused by failures and / or accidents, etc. that occur due to the use of the products outside their specified ranges.
5. When using the products, confirm their applications, and the laws and regulations of the region or country where they are used and verify suitability, safety and other factors for the intended use.
6. When exporting the products, comply with the Foreign Exchange and Foreign Trade Act and all other export-related laws, and follow the required procedures.
7. The products must not be used or provided (exported) for the purposes of the development of weapons of mass destruction or military use. ABLIC Inc. is not responsible for any provision (export) to those whose purpose is to develop, manufacture, use or store nuclear, biological or chemical weapons, missiles, or other military use.
8. The products are not designed to be used as part of any device or equipment that may affect the human body, human life, or assets (such as medical equipment, disaster prevention systems, security systems, combustion control systems, infrastructure control systems, vehicle equipment, traffic systems, in-vehicle equipment, aviation equipment, aerospace equipment, and nuclear-related equipment), excluding when specified for in-vehicle use or other uses. Do not apply the products to the above listed devices and equipments without prior written permission by ABLIC Inc.
   Especially, the products cannot be used for life support devices, devices implanted in the human body and devices that directly affect human life, etc.
   Prior consultation with our sales office is required when considering the above uses.
   ABLIC Inc. is not responsible for damages caused by unauthorized or unspecified use of our products.
9. Semiconductor products may fail or malfunction with some probability.
   The user of the products should therefore take responsibility to give thorough consideration to safety design including redundancy, fire spread prevention measures, and malfunction prevention to prevent accidents causing injury or death, fires and social damage, etc. that may ensue from the products' failure or malfunction.
   The entire system must be sufficiently evaluated and applied on customer's own responsibility.
10. The products are not designed to be radiation-proof. The necessary radiation measures should be taken in the product design by the customer depending on the intended use.
11. The products do not affect human health under normal use. However, they contain chemical substances and heavy metals and should therefore not be put in the mouth. The fracture surfaces of wafers and chips may be sharp. Be careful when handling these with the bare hands to prevent injuries, etc.
12. When disposing of the products, comply with the laws and ordinances of the country or region where they are used.
13. The information described herein contains copyright information and know-how of ABLIC Inc.
    The information described herein does not convey any license under any intellectual property rights or any other rights belonging to ABLIC Inc. or a third party. Reproduction or copying of the information from this document or any part of this document described herein for the purpose of disclosing it to a third-party without the express permission of ABLIC Inc. is strictly prohibited.
14. For more details on the information described herein, contact our sales office.

2.2-2018.06