THIS COPY IS PROVIDED ON A RESTRICTED BASIS AND IS NOT TO BE USED IN ANY WAY DETRIMENTAL TO THE INTERESTS OF PANDUIT CORP.

PANDUIT PART NUMBER	STUD SIZE	DIMENSIONS in.				
		A ±.03	W ±.01	C ±.02	M ±.03	H ±.01
PV18-6LFX	#6	.95 (24.13)	.27 (6.86)	.20 (5.08)	.76 (19.30)	.15 (3.81)
PV18-8LFX	#8	1.01 (25.66)	.29 (7.37)	.20 (5.08)	.80 (20.32)	.17 (4.32)
PV18-10LFX	#10	1.04 (26.42)	.33 (8.38)	.23 (5.84)	.78 (18.82)	.20 (5.08)

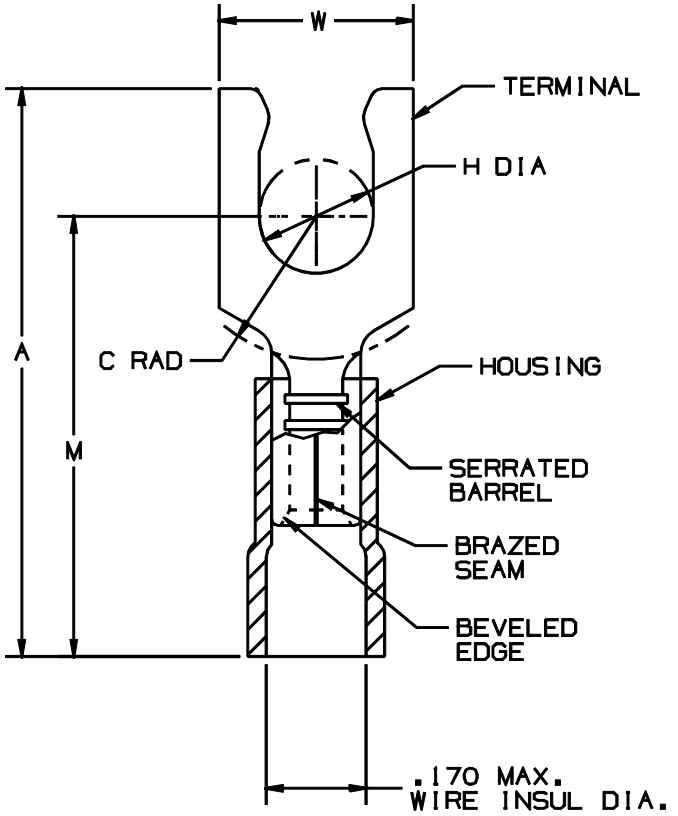

NOTES:

1. UL LISTED & CSA CERTIFIED FOR
   A. 600 V. MAX. VOLTAGE RATING (1000 V. MAX. IN SIGNS, FIXTURES AND LUMINAIRES.)
   B. 22-16 AWG SOLID OR STRANDED COPPER WIRE & 221°F (105°C) MAX TEMP RATING, WITH THE CT-500, CT-1550, CT-1551 & CT-550 INSTALLATION TOOLS.
   C. 22-12 AWG SOLID OR STRANDED COPPER WIRE & 167°F (75°C) MAX TEMP RATING WITH THE CT-100 AND CT-250 INSTALLATION TOOLS.
2. MATERIAL:
   A. STAMPING - .032 (.81) THK COPPER, TIN PLATED
   B. HOUSING - VINYL, RED
3. STRIP LENGTH 5/16 $^{+1/32}_{-0}$
4. PACKAGE QTY.: -C=100/-M=1000
5. DIMENSIONS IN BRACKETS ARE IN MILLIMETERS

LISTED 587H E52164

CERTIFIED LR31212

A41676_00

REV	DATE	BY	CHK	DESCRIPTION	ECN #	QA	CUST	PM	APP
0		MS		RELEASED					

PANDUIT CORP. TINLEY PARK, ILLINOIS

#22-18 BARREL VINYL INSULATED LOCKING FORK, .170 MAX. EXPANDED WIRE INSULATION DIAMETER

DRAWN BY	CHK'D	SCALE	DRAWING NO.
MS		NONE	A41676