DRV3204E-Q1 Three-Phase Brushless Motor Driver

Not Recommended for New Designs

1 Features

- Qualified for Automotive Applications
- AEC Q100 Qualified with the Following Results:
  - Device Temperature Grade 0: –40°C to 150°C Ambient Operating Temperature Range
  - Device HBM ESD Classification Level H2
  - Device CDM ESD Classification Level C2
- 3-Phase Pre-Drivers for N-Channel MOS Field-Effect Transistors (MOSFETs)
- Pulse-Width Modulation (PWM) Frequency up to 20 kHz
- Fault Diagnostics
- Charge Pump
- Phase Comparators
- Microcontroller (MCU) Reset Generator
- Serial Port I/F (SPI)
- Motor-Current Sense
- 5-V Regulator
- Low-Current Sleep Mode
- Operation VB Range From 5.3 V to 26.5 V
- 48-Pin PHP

2 Applications

- Automotive Motor-Control Applications
  - Oil Pump
  - Fuel Pump
  - Water Pump

Typical Application Schematic

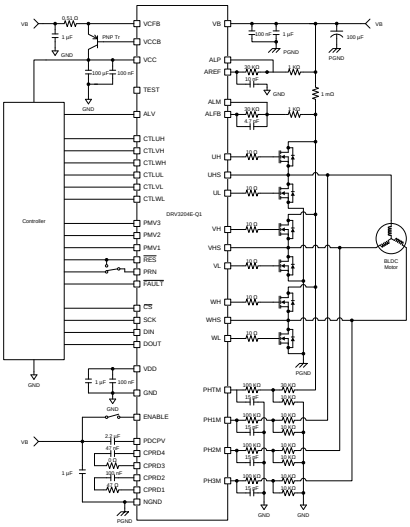

3 Description

The DRV3204E-Q1 device is a field-effect transistor (FET) pre-driver designed for three-phase motor control for applications such as an oil pump or a water pump. The device has three high-side pre-FET drivers and three low-side drivers which are under the control of an external MCU. A charge pump supplies the power for the high side, and there is no requirement for a bootstrap capacitor. For commutation, this integrated circuit (IC) sends a conditional motor signal and output to the MCU. Diagnostics provide undervoltage, overvoltage, overcurrent, overtemperature and power-bridge faults. The motor current is measured using an integrated current-sense amplifier and comparator in a battery common-mode range, which allows the use of the motor current in a high-side current-sense application. External resistors set the gain. The pre-drivers and other internal settings are configured through the SPI.

Device Information(1)

PART NUMBER	PACKAGE	BODY SIZE (NOM)
DRV3204E-Q1	HTQFP (48)	7.00 mm × 7.00 mm

(1) For all available packages, see the orderable addendum at the end of the datasheet.

Table of Contents

4 Revision History

NOTE: Page numbers for previous revisions may differ from page numbers in the current version.

Changes from Revision A (January 2014) to Revision B — **Page**

- Added *Pin Configuration and Functions* section, *ESD Ratings* table, *Feature Description* section, *Application and Implementation* section, *Device and Documentation Support* section, and *Mechanical, Packaging, and Orderable Information* section ... 1
- Changed device status to NRND. ... 1

Changes from Original (October 2013) to Revision A — **Page**

- Changed the delay time symbol t_v to t_d in the *SPI ELECTRICAL CHARACTERISTICS* table ... 5
- Changed the dalay time, SCK to DOUT image reference from Figure 23 to Figure 2 in the *SPI ELECTRICAL CHARACTERISTICS* table ... 5
- Changed the max value for the RONH_HP parameter from 270 to 300 in the *Pre-Driver Electrical Characteristics* table ... 6
- Deleted the 1 from the symbols for the time parameters (t_{on_h}, t_{off_h}, $t_{h\text{-}on}$, and $t_{h\text{-}off}$) for the high-side pre-driver in the *Pre-Driver Electrical Characteristics* table ... 6
- Changed the max for the VOL_L parameter from 50 to 60 in the *Pre-Driver Electrical Characteristics* table ... 6
- Changed the max for the RONL_L parameter from 5 to 6 in the *Pre-Driver Electrical Characteristics* table ... 6
- Changed the symbol for the turnoff time parameter for the low-side pre-driver from t_{off_h} to t_{off_l} in the *Pre-Driver Electrical Characteristics* table ... 7
- Added ADTH to the bit 6:4 description in the FLTCFG register table ... 24
- Changed dead time description for bit 1:0 in the PDCFG register table from 2, 1.5, 1, and 0.5 to 2.1, 1.6, 1.1, and 0.6 (respectively). Also changed the actual deadtime from ±0.2 to ±0.1 ... 28

5 Pin Configuration and Functions

PHP Package
48-PIN HTQFP
Top View

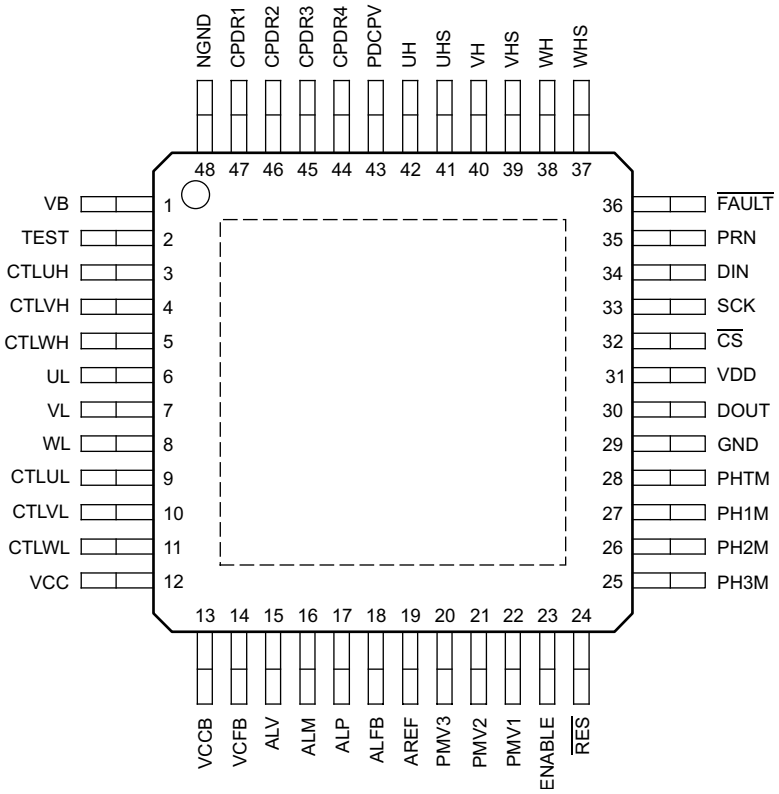

Pin Functions

PIN			MAXIMUM RATING	DESCRIPTION
NAME	NO.	TYPE		
ALFB	18	O	–0.3 V to 40 V	Motor current-sense amplifier feedback
ALM	16	I	–0.3 V to 40 V	Motor current-sense amplifier negative input
ALP	17	I	–0.3 V to 40 V	Motor current-sense amplifier positive input
ALV	15	O	–0.3 V to 6 V	Motor current-sense amplifier output
AREF	19	O	–0.3 V to 40 V	Reference output of motor current- sense amplifier
CPDR1	47	O	–0.3 V to 40 V	Charge-pump output
CPDR2	46	O	–0.3 V to 40 V	Charge-pump output
CPDR3	45	O	–0.3 V to 40 V	Charge-pump output
CPDR4	44	O	–0.3 V to 40 V	Charge-pump output
$\overline{CS}$	32	I	–0.3 V to 6 V	SPI chip select
CTLUH	3	I	–0.3 V to 6 V	Pre-driver parallel input
CTLUL	9	I	–0.3 V to 6 V	Pre-driver parallel input
CTLVH	4	I	–0.3 V to 6 V	Pre-driver parallel input
CTLVL	10	I	–0.3 V to 6 V	Pre-driver parallel input
CTLWH	5	I	–0.3 V to 6 V	Pre-driver parallel input
CTLWL	11	I	–0.3 V to 6 V	Pre-driver parallel input
DIN	34	I	–0.3 V to 6 V	SPI data input
DOUT	30	O	–0.3 V to 6 V	SPI data output

Pin Functions (continued)

PIN			MAXIMUM RATING	DESCRIPTION
NAME	NO.	TYPE		
ENABLE	23	I	–0.3 V to 40 V	Enable input
$\overline{\text{FAULT}}$	36	O	–0.3 V to 6 V	Diagnosis output
GND	29	I	–0.3 V to 0.3 V	GND
NGND	48	I	–0.3 V to 0.3 V	Power GND
PDCPV	43	O	–0.3 V to 40 V	Charge pump output
PH1M	27	I	–1 V to 40 V	Phase comparator input
PH2M	26	I	–1 V to 40 V	Phase comparator input
PH3M	25	I	–1 V to 40 V	Phase comparator input
PHTM	28	I	–1 V to 40 V	Phase comparator reference input
PMV1	22	O	–0.3 V to 6 V	Phase comparator output
PMV2	21	O	–0.3 V to 6 V	Phase comparator output
PMV3	20	O	–0.3 V to 6 V	Phase comparator output
PRN	35	I	–0.3 V to 6 V	Watchdog timer-pulse input
$\overline{\text{RES}}$	24	O	–0.3 V to 6 V	MCU reset output
SCK	33	I	–0.3 V to 6 V	SPI clock
TEST	2	I	–0.3 V to 20 V	TEST input
UH	42	O	–5 V to 40 V	Pre-driver output
UHS	41	O	–5 V to 40 V	Pre-driver reference
UL	6	O	–0.3 V to 20 V	Pre-driver output
VB	1	I	–0.3 V to 40 V	VB input
VCC	12	I	–0.3 V to 6 V	VCC supply input
VCCB	13	O	–0.3 V to 40 V	VCC regulator base driver of PNP external transistor
VCFB	14	I	–0.3 V to 40 V	VCC regulator current-sense input
VDD	31	O	–0.3 V to 3.6 V	VDD supply output
VH	40	O	–5 V to 40 V	Pre-driver output
VHS	39	O	–5 V to 40 V	Pre-driver reference
VL	7	O	–0.3 V to 20 V	Pre-driver output
WH	38	O	–5 V to 40 V	Pre-driver output
WHS	37	O	–5 V to 40 V	Pre-driver reference
WL	8	O	–0.3 V to 20 V	Pre-driver output

6 Specifications

6.1 Absolute Maximum Ratings

over operating free-air temperature range (unless otherwise noted)

		MIN	MAX	UNIT
T_A	Operating temperature range	–40	150	ºC
T_J	Junction temperature	–40	175	ºC
T_{stg}	Storage temperature	-55	175	ºC

6.2 ESD Ratings

			VALUE	UNIT
$V_{(ESD)}$	Electrostatic discharge[(1)]	Human-body model (HBM)	±2000	V
		Charged-device model (CDM)	±500	

(1) Performance of ESD testing is according to the ACE-Q100 standard.

6.3 Thermal Information

THERMAL METRIC[1]		DRV3204E-Q1 PHP (HTQFP) 48 PINS	UNIT
θ_{JA}	Junction-to-ambient thermal resistance	26.1	°C/W
θ_{JCtop}	Junction-to-case (top) thermal resistance	11.5	°C/W
θ_{JB}	Junction-to-board thermal resistance	7.2	°C/W
ψ_{JT}	Junction-to-top characterization parameter	0.2	°C/W
ψ_{JB}	Junction-to-board characterization parameter	7.1	°C/W
θ_{JCbot}	Junction-to-case (bottom) thermal resistance	0.4	°C/W

(1) For more information about traditional and new thermal metrics, see the *Semiconductor and IC Package Thermal Metrics* application report.

6.4 Electrical Characteristics

VB = 12 V, T_A = –40°C to 150°C (unless otherwise specified)[1]

PARAMETER		TEST CONDITIONS	MIN	TYP	MAX	UNIT
WATCHDOG						
VSTN[2]	Function start VCC voltage $\overline{RES}$	See Figure 1		0.8	1.3	V
t_{ON} [2]	Power-on time $\overline{RES}$		2.5	3	3.5	ms
t_{OFF} [2]	Clock-off reset time $\overline{RES}$		64	80	96	ms
t_{RL} [2]	Reset-pulse low time $\overline{RES}$		16	20	24	ms
t_{RH} [2]	Reset-pulse high time $\overline{RES}$		64	80	96	ms
t_{RES} [2]	Reset delay time $\overline{RES}$		30	71.5	90	µs
P_{wth} [2]	Pulse duration PRN		2			µs
SPI						
f_{op}	SPI clock frequency				4	MHz
t_{lead} [2]	Enable lead time		200			ns
t_{wait} [2]	Wait time between two successive communications		5			µs
t_{lag} [2]	Enable lag time		100			ns
t_{pw} [2]	SCLK pulse duration		100			ns
t_{su} [2]	Data setup time		100			ns
t_h [2]	Data hold time		100			ns
t_{dis} [2]	Data-output disable time				200	ns
t_{en} [2]	Data-output enable time				100	ns
t_d [2]	Data delay time, SCK to DOUT	C_L = 50 pF, see Figure 2.	0		100	ns

(1) The timing parameters are invalid if watch dog timer is disabled.
(2) Specified by design.

Electrical Characteristics (continued)

VB = 12 V, T_A = –40°C to 150°C (unless otherwise specified)[1]

PARAMETER		TEST CONDITIONS	MIN	TYP	MAX	UNIT
CHARGE PUMP						
Vchv1_0	Output voltage, PDCPV	VB = 5.3 V, Iload = 0 mA, C1 = C2 = 47 nF, CCP = 2.2 µF, R1 = R2 = 0 Ω	VB + 7	VB + 8		V
Vchv1_1	Output voltage, PDCPV	VB = 5.3 V, Ioad = 5 mA, C1 = C2 = 47 nF, CCP = 2.2 µF, R1 = R2 = 0 Ω	VB + 5.5	VB + 6.5		V
Vchv1_2	Output voltage, PDCPV	VB = 5.3 V, Ioad = 8 mA, C1 = C2 = 47 nF, CCP = 2.2 µF, R1 = R2 = 0 Ω	VB + 4.5	VB + 5.5		V
Vchv2_0	Output voltage, PDCPV	VB = 12 V, Ioad = 0 mA, C1 = C2 = 47 nF, CCP = 2.2 µF, R1 = R2 = 0 Ω	VB + 10	VB + 12	VB + 14	V
Vchv2_1	Output voltage, PDCPV	VB = 12 V, Ioad = 11 mA, C1 = C2 = 47 nF, CCP = 2.2 µF, R1 = R2 = 0 Ω	VB + 9.5	VB + 11.5	VB + 13.5	V
Vchv2_2	Output voltage, PDCPV	VB = 12 V, Ioad = 18 mA, C1 = C2 = 47 nF, CCP = 2.2 µF, R1 = R2 = 0 Ω	VB + 9	VB + 11	VB + 13	V
Vchv3_0	Output voltage, PDCPV	VB = 18 V, Ioad = 0 mA, C1 = C2 = 47 nF, CCP = 2.2 µF, R1 = R2 = 0 Ω	VB + 10	VB + 12	VB + 14	V
Vchv3_1	Output voltage, PDCPV	VB = 18 V, Ioad = 13 mA, C1 = C2 = 47 nF, CCP = 2.2 µF, R1 = R2 = 0 Ω	VB + 10	VB + 12	VB + 14	V
Vchv3_2	Output voltage, PDCPV	VB = 18 V, Ioad = 22 mA, C1 = C2 = 47 nF, CCP = 2.2 µF, R1 = R2 = 0 Ω	VB + 10	VB + 12	VB + 14	V
VchvOV	Overvoltage detection threshold		35	37.5	40	V
VchvUV	Undervoltage detection threshold		VB + 4	VB + 4.5	VB + 5	V
t_{chv} [2]	Rise time	VB = 5.3 V, C1 = C2 = 47 nF, CCP = 2.2 µF, R1 = R2 = 0 Ω, Vchv, UV released		1	2	ms
Ron	On-resistance, S1-S4	See Figure 10		8		Ω
HIGH-SIDE PRE-DRIVER						
VOH_H	Output voltage, turnon side	Isink = 10 mA, PDCPV - xH		1.35	2.7	V
VOL_H	Output voltage, turnoff side	Isource = 10 mA, xH - xHS		25	50	mV
RONH_HP	On-resistance, turnon side (Pch)	U(V/W)H = PDCPV - 1 V		135	300	Ω
RONH_HN	On-resistance, turnon side (Nch)	U(V/W)H = PDCPV - 2.5 V		4	8	Ω
RONL_H	On-resistance turnoff side			2.5	5	Ω
t_{on_h} [2]	Turnon time	C_L = 12 nF, R_L = 0 Ω from 20% to 80%	50		200	ns
t_{off_h} [2]	Turnoff time	C_L = 12 nF, R_L = 0 Ω from 80% to 20%	50		200	ns
$t_{h\text{-}ondly}$ [2]	Output delay time	C_L = 12 nF, R_L = 0 Ω to 20%, no dead time		200		ns
$t_{h\text{-}offdly}$ [2]	Output delay time	C_L = 12 nF, R_L = 0 Ω to 80%, no dead time		200		ns
VGS_hs	Gate-source high -side voltage difference	xH-xHS	–0.3		18	V
LOW-SIDE PRE-DRIVER						
VOH_L1	Output voltage, turnon side	VB = 12 V, Isink = 10 mA, xL - NGND	10	12	14	V
VOH_L2	Output voltage, turnon side	VB = 5.3 V, Isink = 10 mA, xL - NGND	5.5	7.5	10	V
VOL_L	Output voltage, turnoff side	Isource = 10 mA, xL - NGND		25	60	mV
RONH_L	On-resistance, turnon side			6	12	Ω
RONL_L	On-resistance, turnoff side			2.5	6	Ω
t_{on_l} [2]	Turnon time	C_L = 18 nF, R_L = 0 Ω, from 20% to 80% of 12 V, from 20% to 80% of 6 V (VB = 5.3 V)	50		200	ns

Electrical Characteristics (continued)

VB = 12 V, T_A = –40°C to 150°C (unless otherwise specified)[1]

PARAMETER		TEST CONDITIONS	MIN	TYP	MAX	UNIT
t_{off_l} [2]	Turnoff time	C_L = 18 nF, R_L = 0 Ω, from 80% to 20% of 12 V, from 80% to 20% of 6 V (VB = 5.3 V)	50		200	ns
$t_{l\text{-}ondly}$ [2]	Output delay time	C_L = 18 nF, R_L = 0 Ω, to 20% of 12 V, to 20% of V_{OH} = 6 V (VB = 5.3 V), no dead time		200		ns
$t_{l\text{-}offdly}$ [2]	Output delay time	C_L = 18 nF, R_L = 0 Ω, to 80% of 12 V, to 80% of V_{OH} = 6 V (VB = 5.3 V), no dead time		200		ns
t_{diff1} [2]	Differential time1	(Th-on) - (Tl-off), no dead time, See Figure 3	–200	0	200	ns
t_{diff2} [2]	Differential time2	(Tl-on) - (Tl-off), no dead time, See Figure 3	–200	0	200	ns
t_{dead} [2]	Dead time	OSC1 = 10 MHz SPI register PDCFG.DEADT	2 1.5 1 0.5		2.2 1.7 1.2 0.7	µs
PHASE COMPARTOR						
Viofs	Input offset voltage		–15		15	mV
Vinm	Input voltage range, PHTM		1.3		4.5	V
Vinp	Input voltage range, PHxM		–1		VB	V
Vhys	Threshold hysteresis voltage	SPI register SPARE. SEL_COMP_HYS		0		mV
			12.5	25	50	
			25	50	100	
			50	100	200	
V_{OH}	Output high voltage	Isink = 2.5 mA	0.9 × VCC			V
V_{OL}	Output low voltage	Isource = 2.5 mA			0.1 × VCC	V
t_{res_tr} [2]	Response time, rising	C_L = 100 pF		0.7	1.5	µs
t_{res_tf} [2]	Response time, falling	C_L = 100 pF		0.7	1.5	µs
MOTOR CURRENT SENSE						
VOfs	Input offset voltage		–5		5	mV
VO_0	Output voltage, ALV	Imotor = 0 A, SPI register CSCFG. CSOFFSET		0.5 1 1.5 2 2.5		V
VLine	Linearity, ALV	Rshunt = 1 mΩ, R11 = R12 = 1 kΩ, R21 = R22 = 30 kΩ	29.4	30	30.6	mV/A
VGain	Gain		10	30		V/V
Tset_TR1 [2]	Settling time (rise), ALV ±1%	Rshunt = 1 mΩ, VGain = 30, C_L = 100 pF, Imotor = 0 A → 30 A, (ALV: 1 V → 1.9 V, AREF = 1 V)		1	2.5	µs
Tset_TR2 [2]	Settling time(rise), ALV ±1%	Rshunt = 1 mΩ, VGain = 30, C_L = 100 pF, Imotor = 0 A → 100 A, (ALV: 1 V → 4 V, AREF = 1 V)		1	2.5	µs
Tset_TF1 [2]	Settling time(fall), ALV ±1%	Rshunt = 1 mΩ, VGain = 30, C_L = 100 pF, Imotor = 30 A→0, (ALV: 1.9 V → 1 V, AREF = 1 V)		1	2.5	µs
Tset_TF2 [2]	Settling time(fall), ALV ±1%	Rshunt = 1 mΩ, VGain = 30, C_L = 100 pF, Imotor = 100 A→0, (ALV: 0.4 V → 1 V, AREF = 1 V)		1	2.5	µs

Electrical Characteristics (continued)

VB = 12 V, T_A = –40°C to 150°C (unless otherwise specified)(1)

PARAMETER		TEST CONDITIONS	MIN	TYP	MAX	UNIT
OVADth	Overcurrent threshold	Rshunt = 1 mΩ, VGain = 30, AREF = 1 V, ADTH = 2.5 V, SPI register FLTCFG. MTOCTH, OVADth = (2 × ADTH - AREF) / (Rshunt × VGain)	119.7	133	146.3	A
TDEL_OVAD(2)	Propagation delay (rise or fall)				1.5	µs
tfiltMTOC	filtering time	OSC1 = 9 MHz-11 MHz	0.8	1	1.2	µs
VCC						
VCC1	Output Voltage		4.9	5	5.1	V
VCC2	Output Voltage	VB = 4.5 V, ILVCC = 5 mA - 150 mA	4.25		4.5	V
IBVCC	Base Current		1.5			mA
hfePNP	DC current gain of external PNP		100			
VLRVCC	Load regulation	ILVCC = 5 mA - 150 mA	–20		20	mV
CVCC	External Capacitance		22		100	µF
RVCC	ESR of external Capacitor				300	mΩ
VCCUV	Under voltage detection threshold	SPI register FLTCFG. VCCUVTH	3.7 3.9	4 4.2	4.3 4.5	V
VCCUVHYS	Under voltage detection threshold hysteresis		50	100	200	mV
VCCOV	Overvoltage detection threshold		6	6.5	7	V
VCCOC	Current Limit	Rsns = 0.51 Ω, 0.2 V = Rsns(3), VCCOC	300	400	550	mA
Tvcc1(2)	Rise Time	VCC > VCCUV, CVCC = 22 µF			0.5	ms
Tvcc2(2)	Rise Time	VCC > VCCUV, CVCC = 100 µF			1.5	ms
VDD						
VDD	Output Voltage		3	3.3	3.6	V
CVDD	Load Capacitance			1		µF
VDDUV	Under voltage detection threshold		2.1	2.3	2.5	V
VDDOV	Overvoltage detection threshold		4	4.3	4.6	V
Tvdd(2)	Rise Time	VDD > VDDUV, CVDD = 1 µF			100	µs
VB MONITOR						
VBOV	VB overvoltage detection threshold level		26.5	27.5	28.5	V
VBOVhys(2)	VB overvoltage detection hysteresis		0.2	0.5	1.2	V
VBUV	VB Undervoltage detection threshold level	SPI register FLTCFG. VBUVTH	3.65 4.15 4.65 5.15	4 4.5 5 5.5	4.35 4.85 5.35 5.85	V
VBUVhys(2)	VB Undervoltage detection hysteresis	SPI register FLTCFG. VBUVTH	0.1 0.2 0.2 0.3	0.25 0.4 0.5 0.65	0.5 0.8 1.0 1.3	V
THERMAL SHUT DOWN						
TSD(2)	Thermal shut down threshold level		155	175	195	°C
TSDhys(2)	Thermal shut down hysteresis		5	10	15	°C

(3) No variation of the external components.

Electrical Characteristics (continued)

VB = 12 V, T_A = –40°C to 150°C (unless otherwise specified)(1)

PARAMETER		TEST CONDITIONS	MIN	TYP	MAX	UNIT
OSCILLATOR						
OSC1	OSC1 frequency		9	10	11	MHz
OSC2	OSC2 frequency			10		MHz
INPUT BUFFER1						
V_{IH}	Input threshold logic high		0.7 × VCC			V
V_{IL}	Input threshold logic low				0.3 × VCC	V
Ru or Rd	Input pullup or pulldown resistance		50	100	150	kΩ
OUTPUT BUFFER1(2)						
V_{OH}	Output level logic high	Isink = 2.5 mA	0.9 × VCC			V
V_{OL}	Output level logic low	Isource = 2.5 mA			0.1 × VCC	V
OUTPUT BUFFER3						
R_RES	Pullup Resistor		2	3	4	kΩ
V_{OL}	Output level logic low	Isource = 2 mA			0.1 × VCC	V

6.5 Supply Voltage and Current

VB = 12 V, T_A = –40°C to 150°C (unless otherwise specified)

PARAMETER		TEST CONDITIONS	MIN	TYP	MAX	UNIT
SUPPLY INPUT						
VB1(1)	VB supply voltage (motor operation)		5.3	12	18	V
VB2(1)	VB supply voltage (MCU operation)		4.5	12	18	V
VB3(2)	VB supply voltage		18		26.5	V
Ivb	VB operating current	ENABLE = High, no PWM		18	27	mA
Ivbq	VB quiescent current	ENABLE = Low		50	100	µA

(1) Performance of supply voltage 5.3 V to 18 V is according to the ACE-Q100 (Grade 0) standard.
(2) Specified by design.

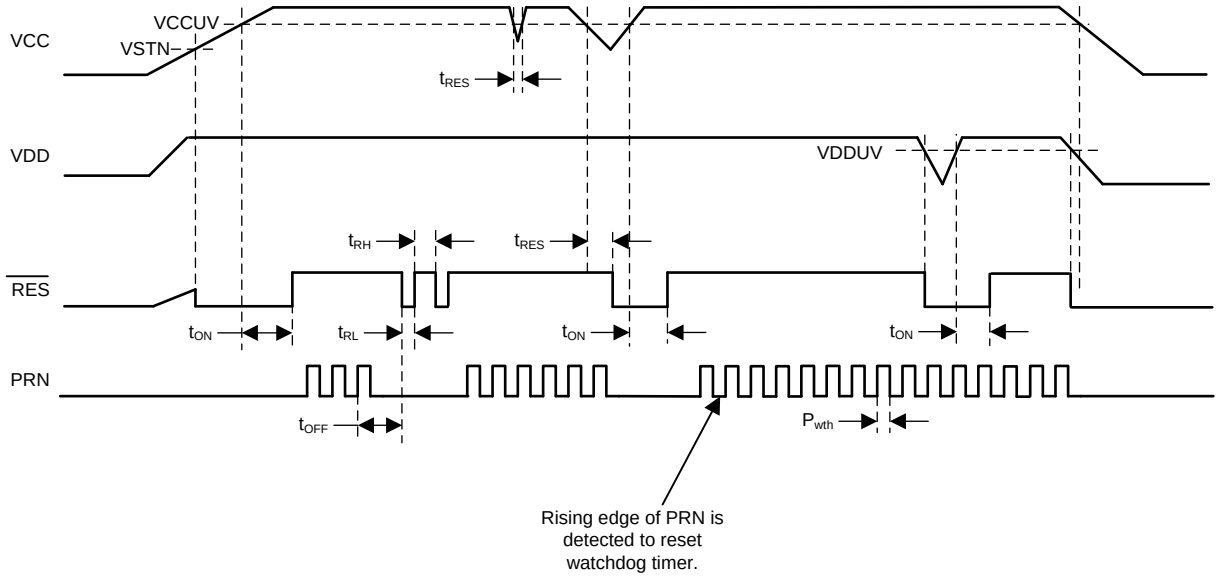

NOTE: VCC undervoltage condition sets $\overline{RES}$ = Low.

Figure 1. Watchdog Timing Chart

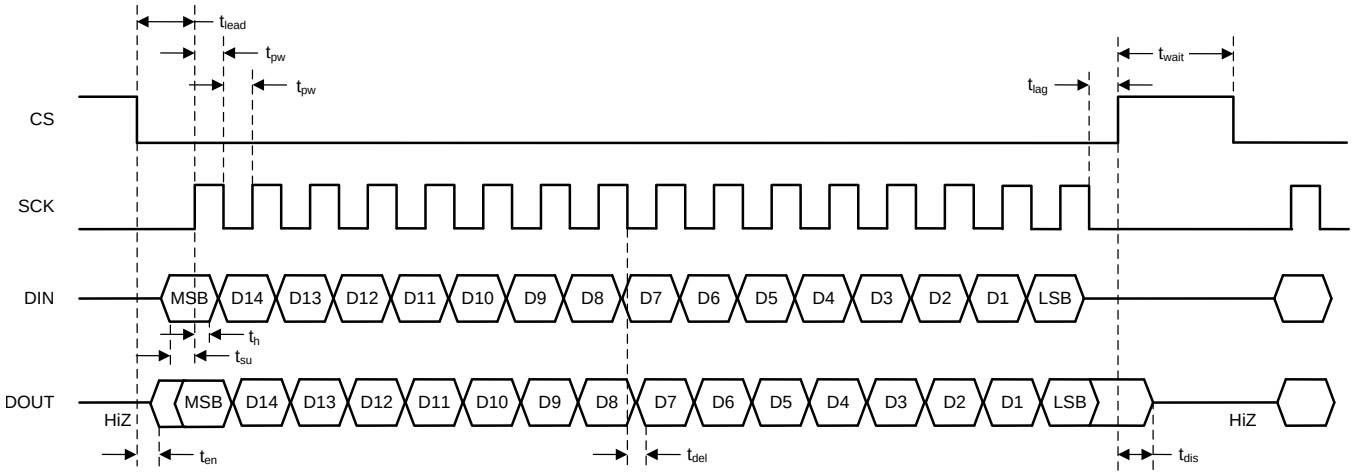

Figure 2. SPI Timing Diagram

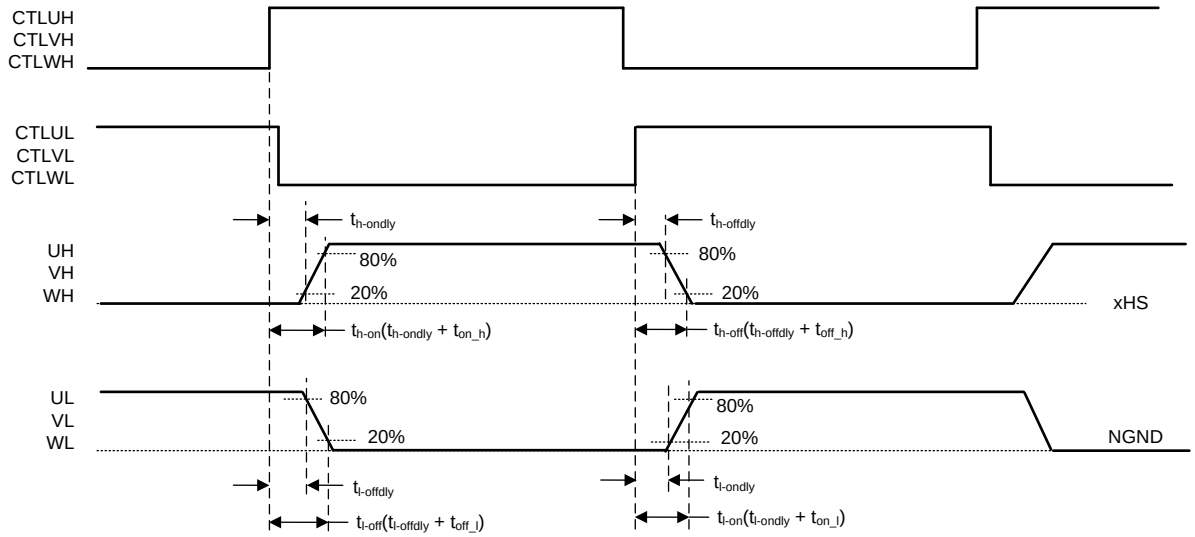

NOTE: This diagram excludes dead time to explain the timing parameters of the pre-driver.

Figure 3. Delay Time From Input to Output

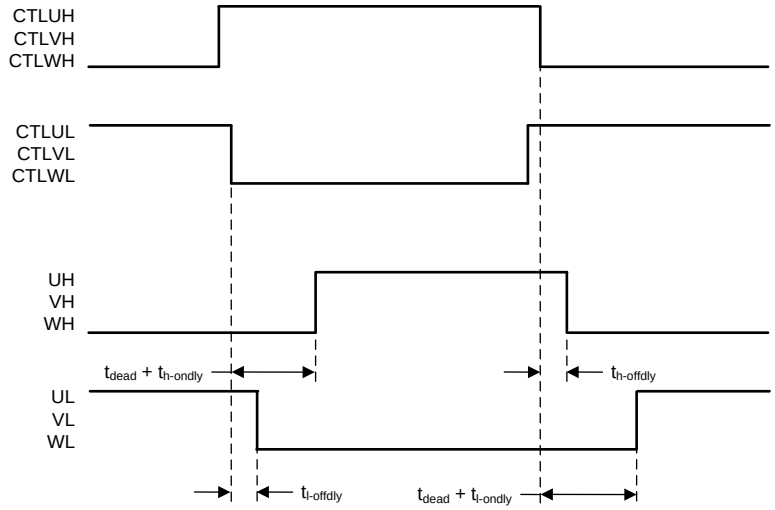

Figure 4. Dead Time

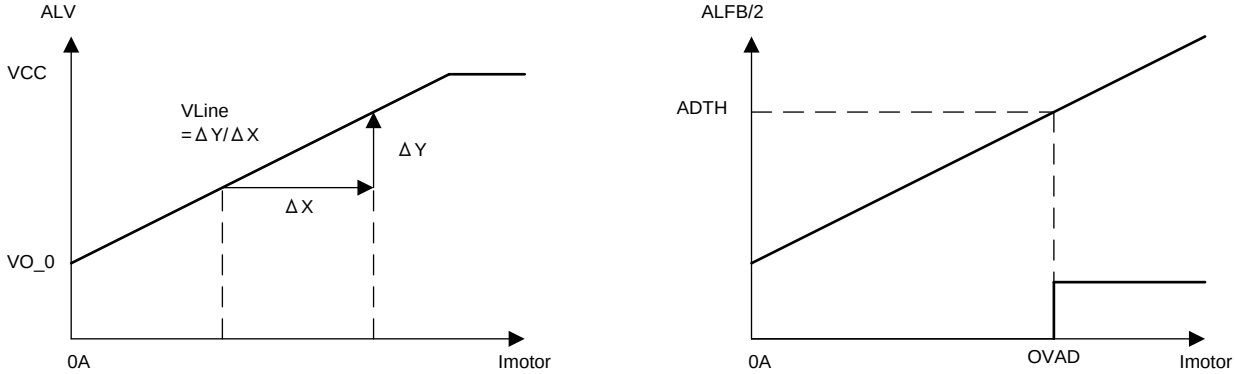

Figure 5. Motor-Current Sense and Overcurrent

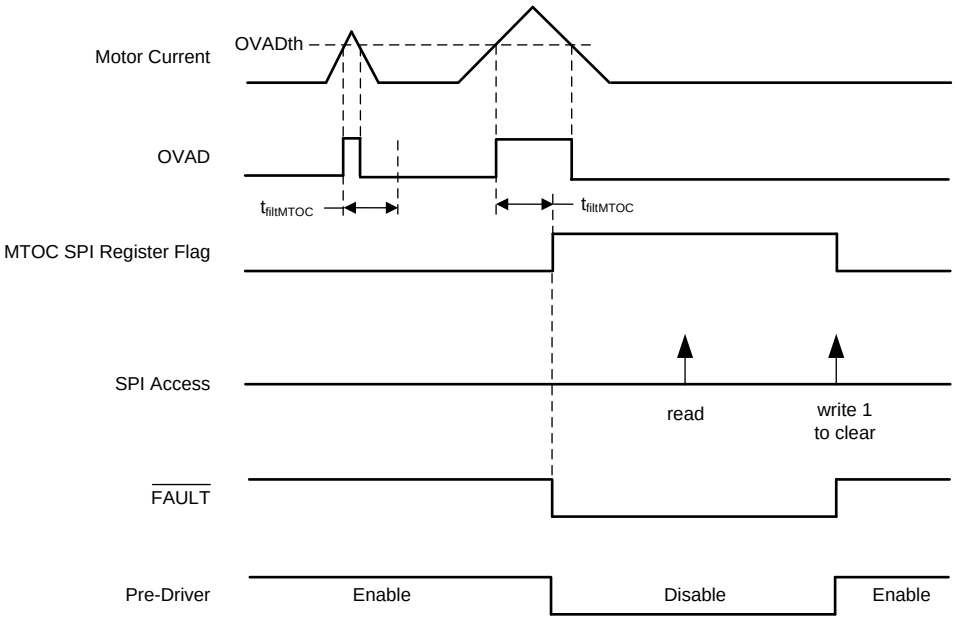

(1) MCU must set the FLTCFG.FLGLATCH_EN bit to 1 to get the latch-type operation shown in Figure 6.

(2) When MTOC condition is detected, $\overline{FAULT}$ is asserted to low if FE_MTOC bit is 1.

(3) When MTOC condition is detected, Pre Driver is disabled if SE_MTOC is 1.

Figure 6. Motor Overcurrent Event

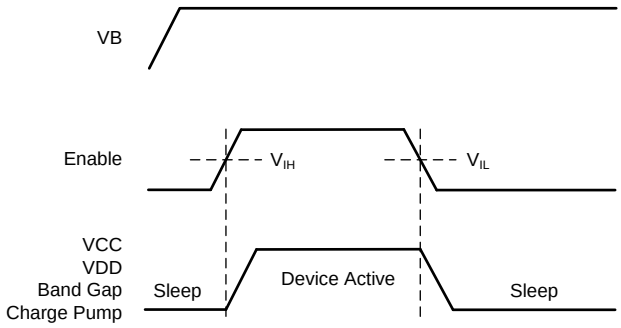

Figure 7. I/O ENABLE Timing Chart

7 Detailed Description

7.1 Functional Block Diagram

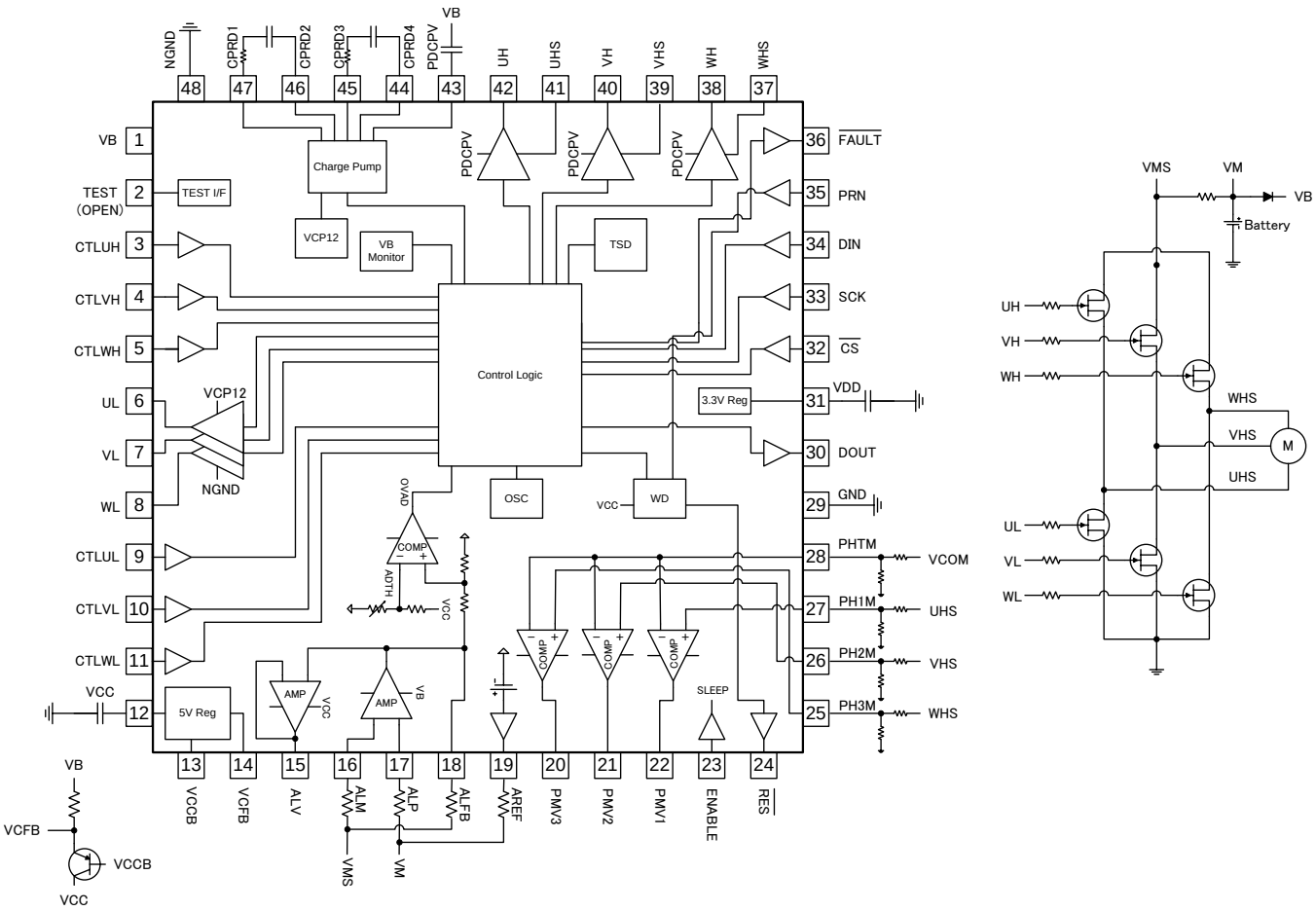

7.2 Feature Description

7.2.1 Watchdog

A watchdog monitors the PRN signal and VCC supply level and generates a reset to the MCU via the $\overline{\text{RES}}$ pin if the status of PRN is not normal or VCC is lower than the specified threshold level. Detection of a special pattern on the PRN input during power up can disable the watchdog.

Feature Description (continued)

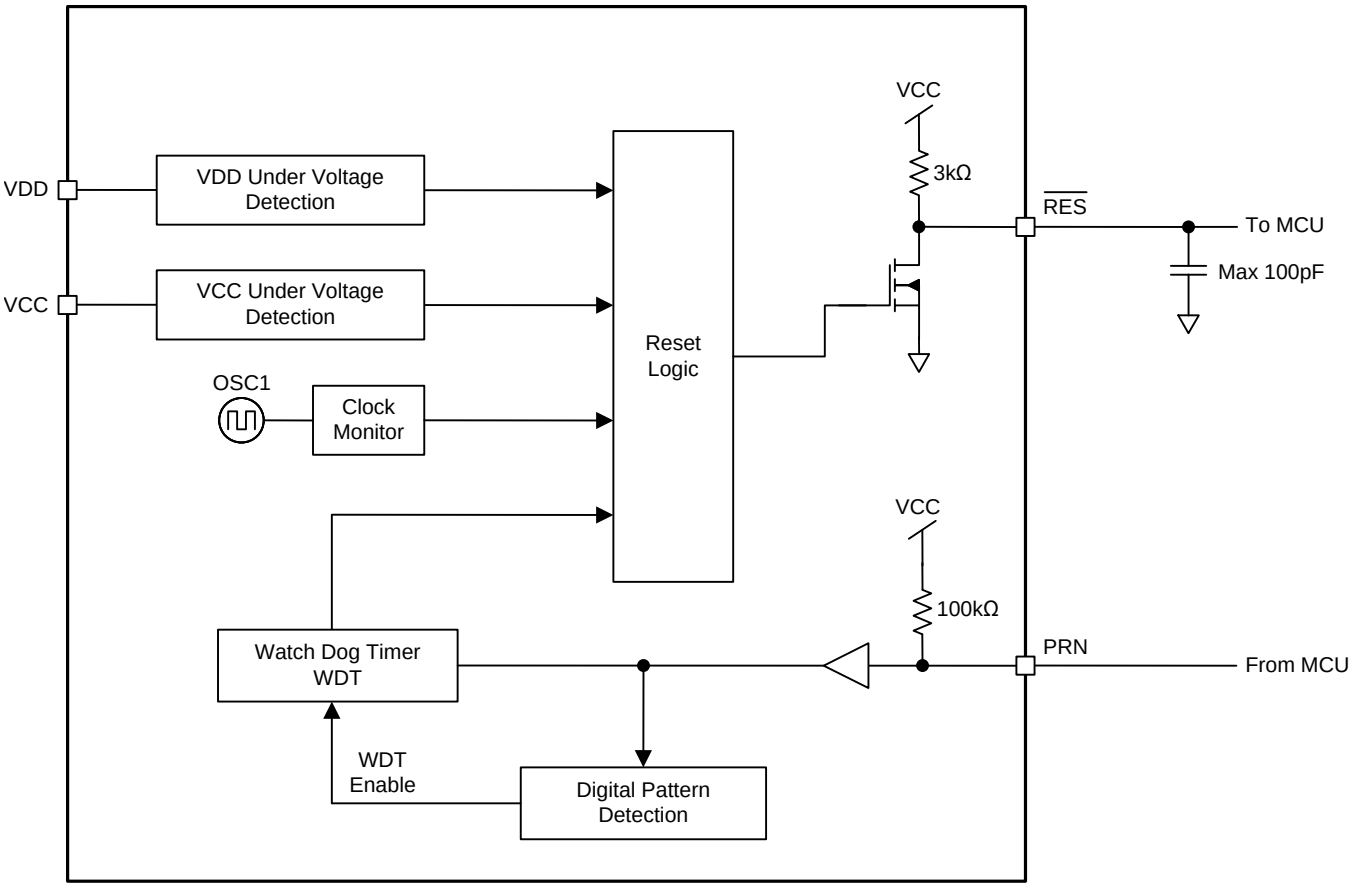

Figure 8. Watchdog Block Diagram

7.2.2 Serial Port I/F

The device configuration is set and the diagnostic information read-out ocurrs through SPI. SPI operates in slave mode. SPI uses four signals according as shown in the timing diagram of Figure 2.

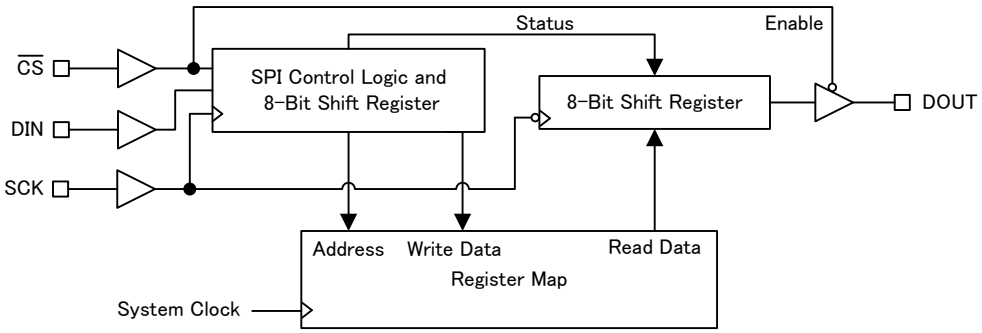

Figure 9. Block Diagram of SPI

Feature Description (continued)

7.2.2.1 $\overline{CS}$ - Chip Select

The MCU uses $\overline{CS}$ to select the IC. $\overline{CS}$ is normally high, and communication is possible only when $\overline{CS}$ is forced low. When $\overline{CS}$ falls, communication between this IC and the MCU starts. The transmitted data are latched and the DOUT output pin comes out of high impedance. When $\overline{CS}$ rises, communication stops. The DOUT output pin goes into high impedance. The next falling edge starts another communication. There is a minimum waiting time between two communications (t_{wait}). The pin has an internal pullup.

7.2.2.2 SCK - Synchronization Serial Clock

The MCU uses SCK to synchronize communication. SCK is normally low, and the valid clock-pulse number is 16. At each falling edge, the MCU writes a new bit on the DIN input, and the IC writes a new bit on the DOUT output pin. At each rising edge, the IC reads the new bit on DIN, and the MCU reads the new bit on DOUT. The maximum clock frequency is 4 MHz. The pin has an internal pulldown.

7.2.2.3 DIN - Serial Input Data

DIN receives 16-bit data. The order of received bits is from the MSB (first) to the LSB (last). The pin has an internal pulldown. Update of the internal register with the received bits occurs only if the number of clock pulses is 16 while $\overline{CS}$ is low.

7.2.2.4 DOUT - Serial Output Data

DOUT transmits 16-bit data. DOUT is a three-state output, and is in the high-impedance state when $\overline{CS}$ is high. The order of serial data-bit transmission is from the MSB (first) to the LSB (last).

Feature Description (continued)

7.2.3 Charge Pump

The charge-pump block generates a supply for the high-side and low-side pre-drivers to maintain the gate voltage on the external FETs. Use of an external storage capacitor (CCP) and bucket capacitors (C1, C2) supports pre-driver slope and switching-frequency requirements. R1 and R2 can reduce switching current if required. The charge pump has voltage-supervisor functions such as overvoltage and undervoltage, and selectable stop conditions for pre-drivers.

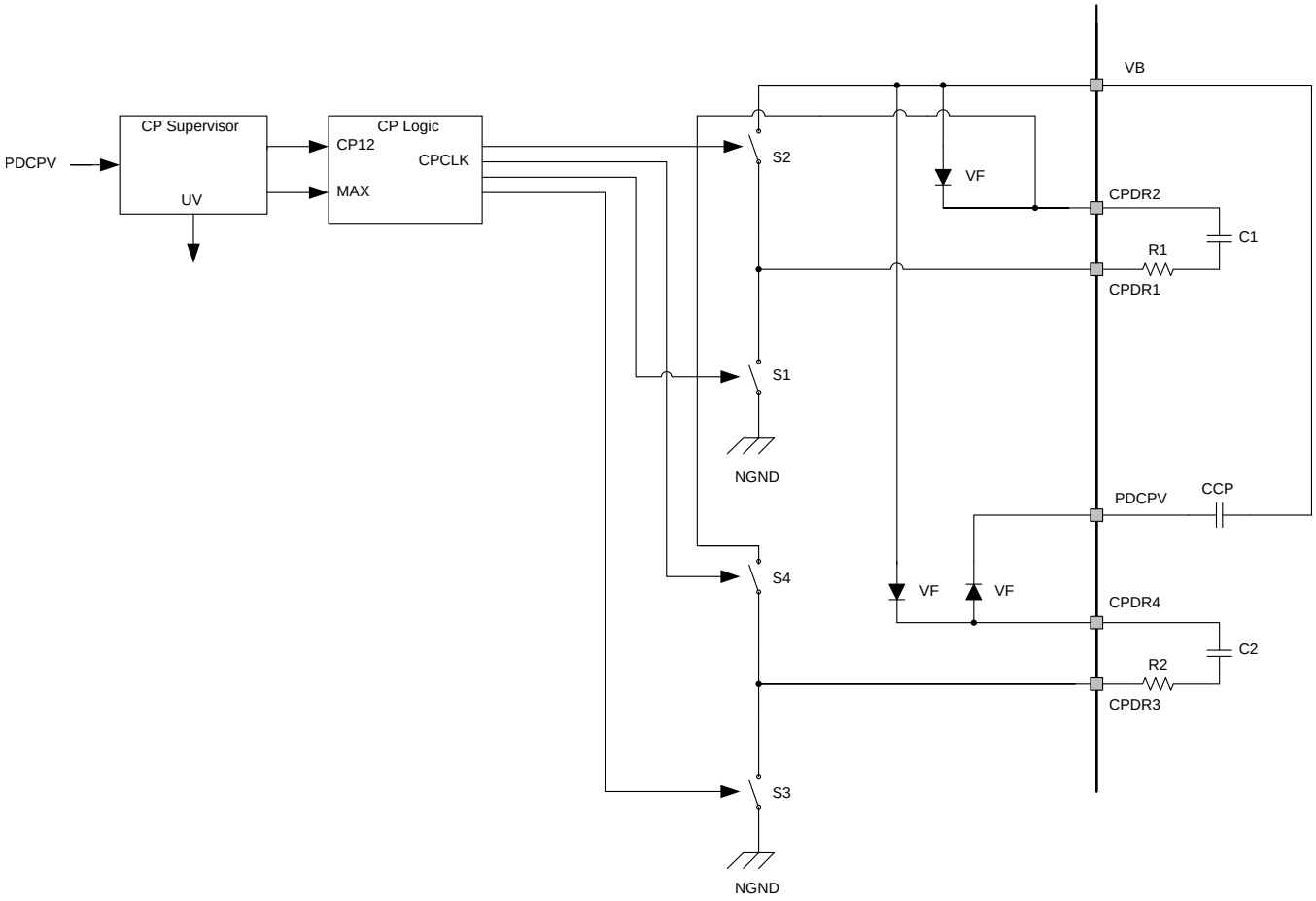

Figure 10. Charge-Pump Block Diagram

Feature Description (continued)

7.2.4 Pre-Driver

The pre-driver block provides three high-side pre-drivers and three low-side pre-drivers to drive external N-channel MOSFETs. The turnon side of the high-side pre-drivers supplies the large N-channel transistor current for quick charge, and PMOS supports output voltages up to PDCPV. The turnoff side of the high-side pre-drivers supplies the large N-channel transistor current for quick discharge. The low-side pre-drivers supply the large N-channel transistor current for charge and discharge. VCP12 (created by a charge pump) controls the output voltage of the low-side pre-driver to output less than 18 V. The pre-driver has a stop condition in some fault conditions (*Fault Detection*) and SPI set (*Serial Port I/F*).

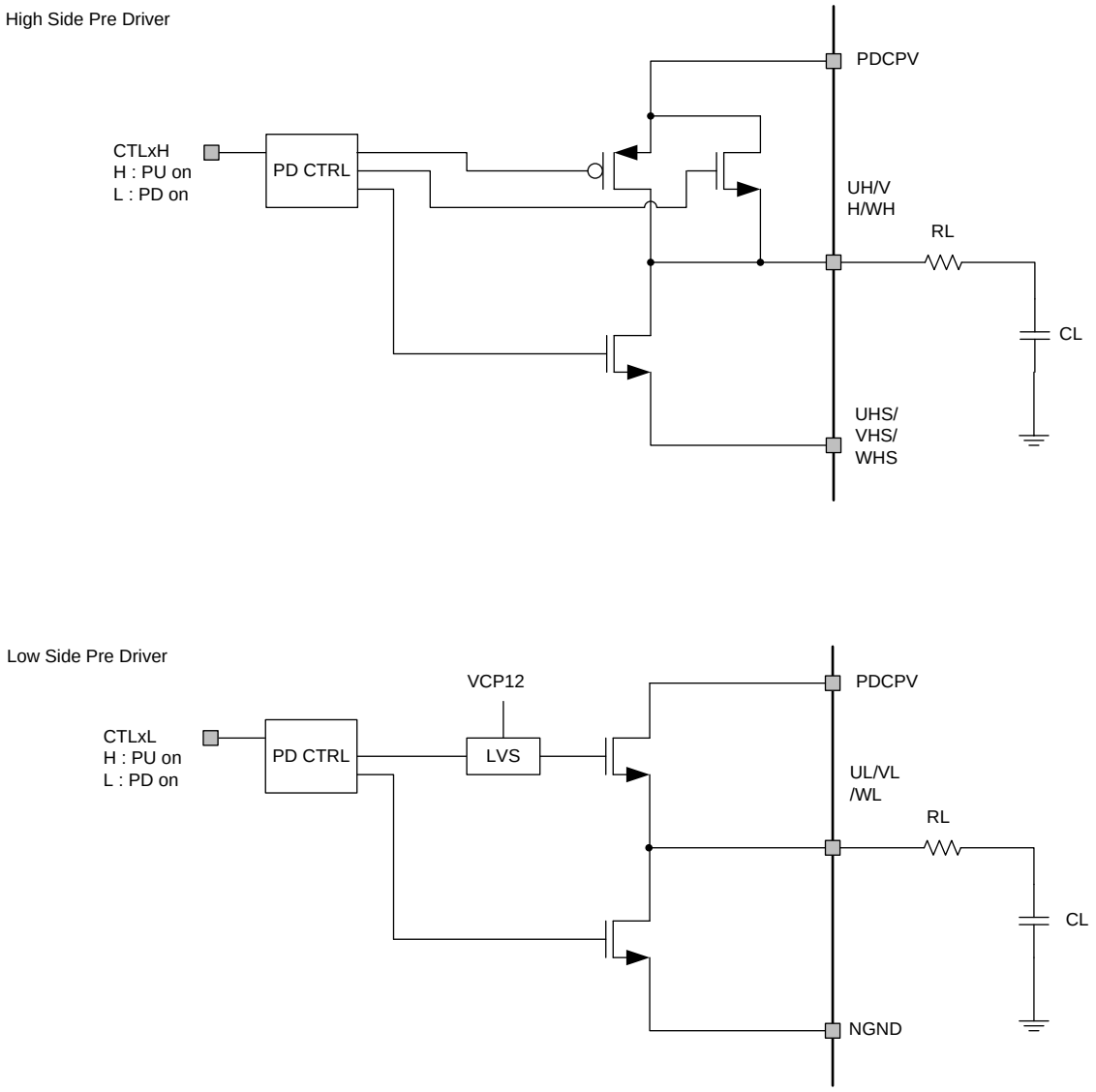

Figure 11. Pre-Driver Block Diagram

Feature Description (continued)

7.2.5 Phase Comparator

The three-channel comparator module monitors the external FETs by detecting the drain-source voltage across the high-side and low-side FETs. PHTM is the threshold level of the comparators usable for sensorless communication. Figure 12 shows an example of the threshold level.

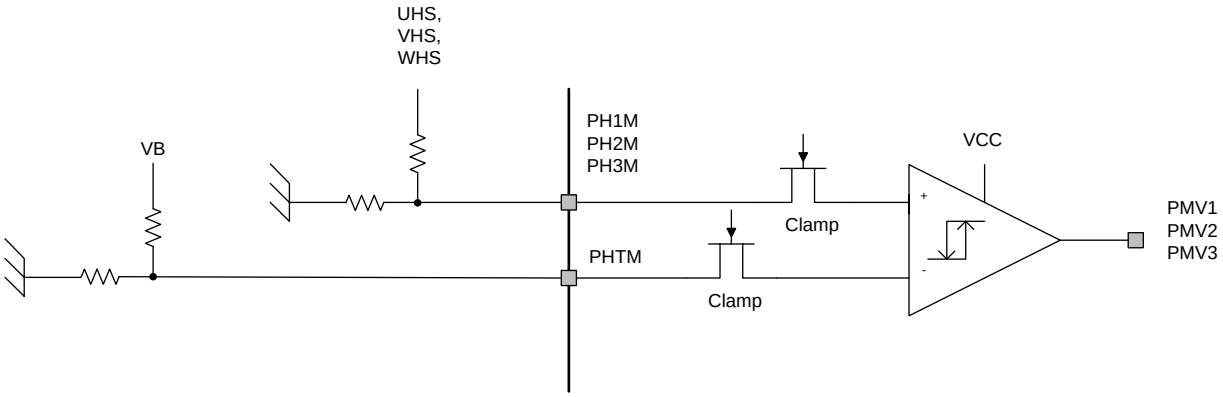

Figure 12. Phase Comparator Block Diagram

Feature Description (continued)

7.2.6 Motor-Current Sense

The operational amplifier operates with an external resistor network for higher flexibility to adjust the current measurement to application requirements. The first-stage amplifier is operating with the external resistor and the output voltage up to VB at ALFB. The gain of amplifier is adjustable by external resistors from ×10 to ×30. The second-stage amplifier is buffer to MCU at ALV. Current sense has comparator for motor overcurrent (OVAD). ADTH is the overcurrent threshold level and set value by SPI. Figure 13 shows the curve of detection level. ALFB is divided by 2 and compare this value with ADTH. In the recommended application, zero-point adjustment is required as large error offset in initial condition.

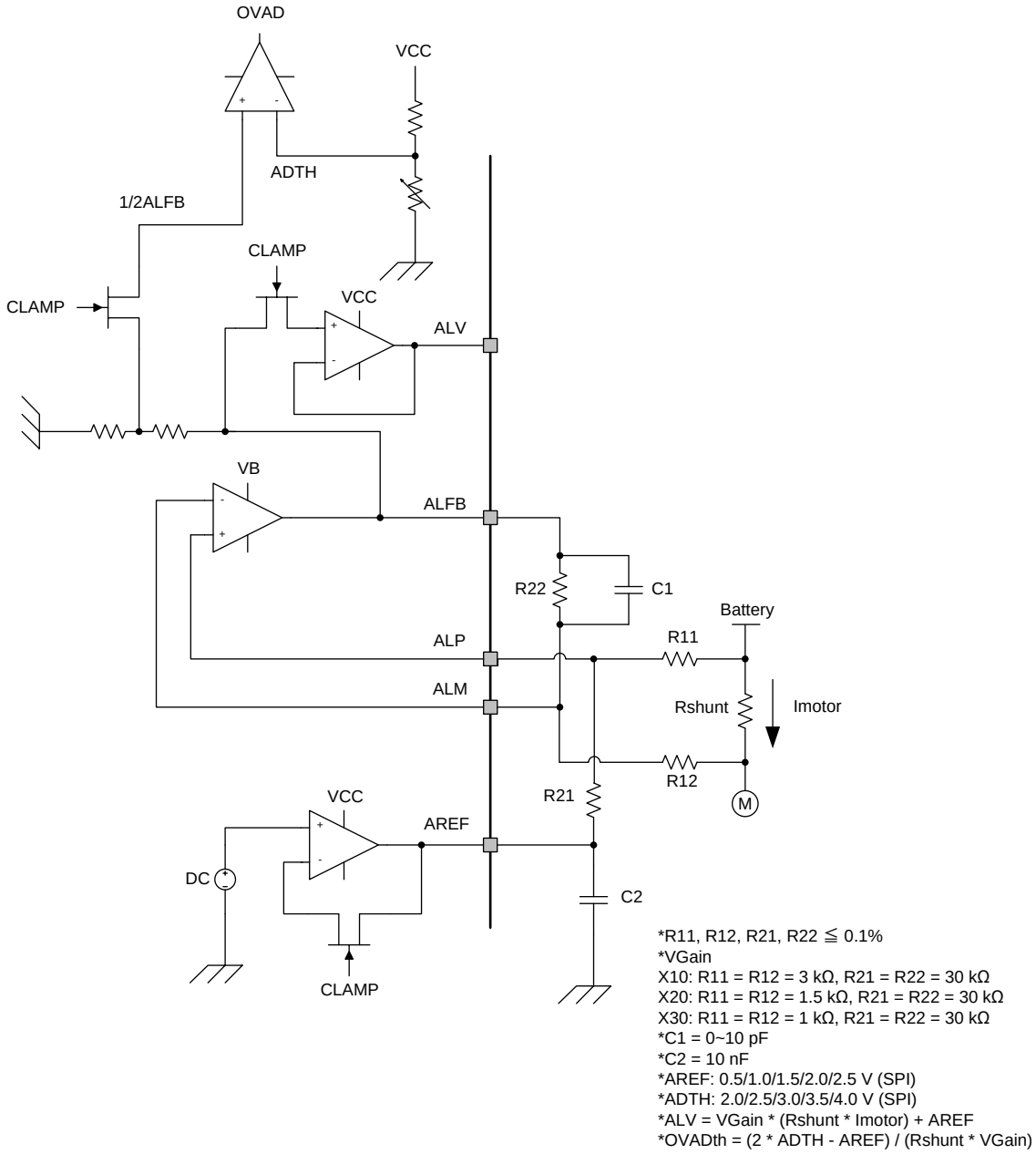

Figure 13. Motor Current-Sense Block Diagram

Feature Description (continued)

7.2.7 Regulators

The regulator block offers a 5-V LDO and a 3.3-V LDO. The VCC LDO regulates VB down to 5 V with an external PNP controlled by the regulator block. The 5 V is supplied to MCU and other components.

The VDD regulator regulates VB down to 3.3 V with internal FET and controller. The 5-V LDO is protected against short to GND fault. Overvoltage and under voltage events of both supplies are detected. The under voltage of the 5-V LDO is set by SPI.

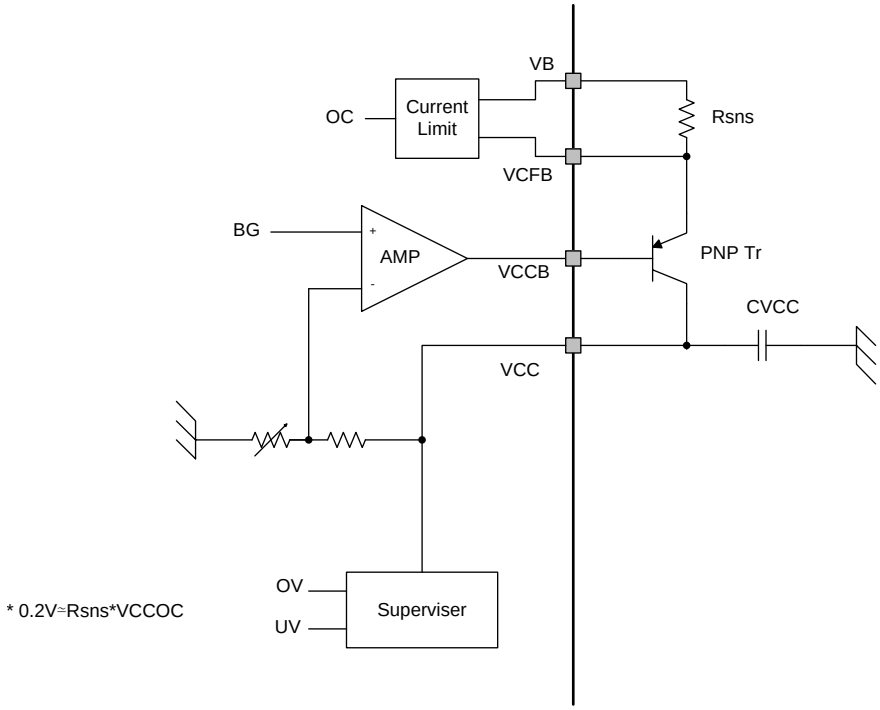

Figure 14. VCC Block Diagram (External Driver)

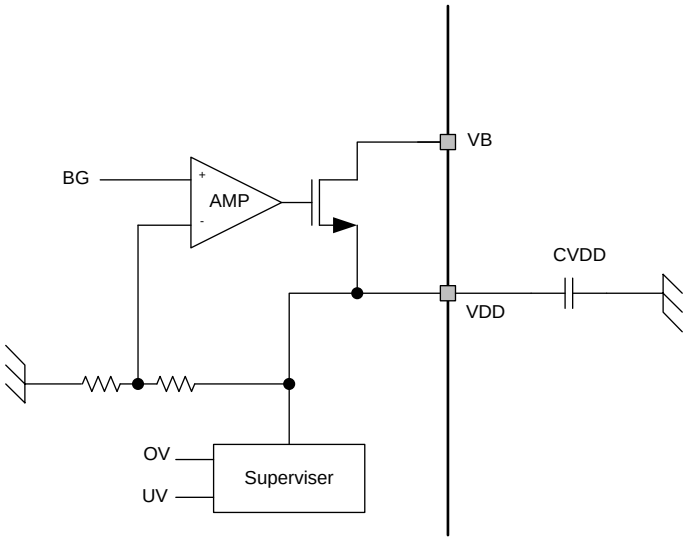

Figure 15. VDD Block Diagram

Feature Description (continued)

7.2.8 VB Monitor

The VB monitoring system has two comparators for undervoltage and overvoltage, and has pre-driver stop controlling system respectively. Overvoltage provides pre-driver stop condition selectable (SPI control). On the other hand, under voltage must stop pre-driver operation under detection (non-selectable). System should return to normal operation automatically after undetected level.

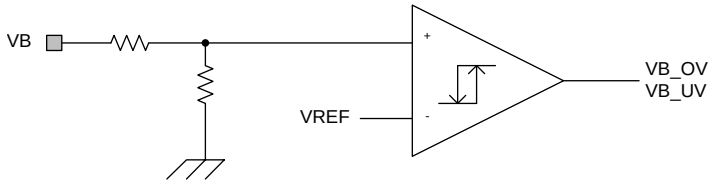

Figure 16. VB Monitor Block Diagram

7.2.9 Thermal Shutdown

The device has temperature sensors that produce pre-driver stop condition if the chip temperature exceeds 175°C (typical).

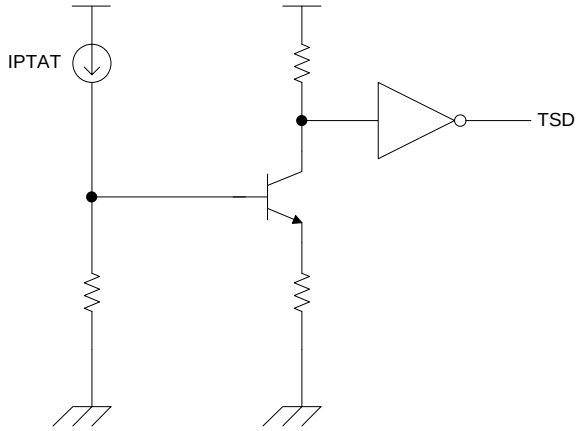

Figure 17. Thermal Shutdown Block Diagram

Feature Description (continued)

7.2.10 Oscillator

The oscillator block generates two 10-MHZ clock signals. OSC1 is the primary clock used for internal logic synchronization and timing control. OSC2 is the secondary clock used to monitor the status of OSC1.

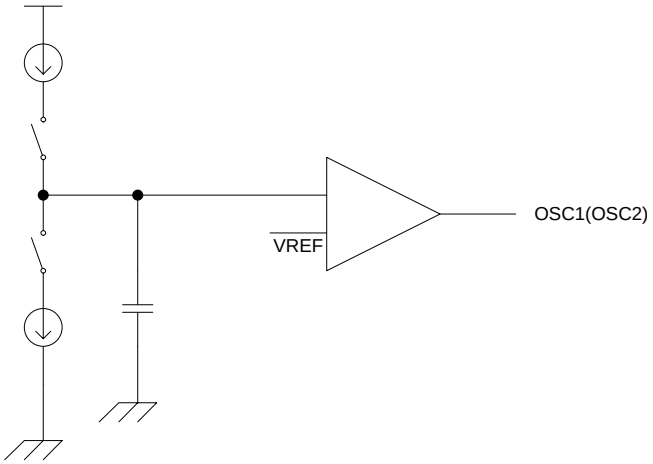

Figure 18. Oscillator Block Diagram

7.2.11 I/O

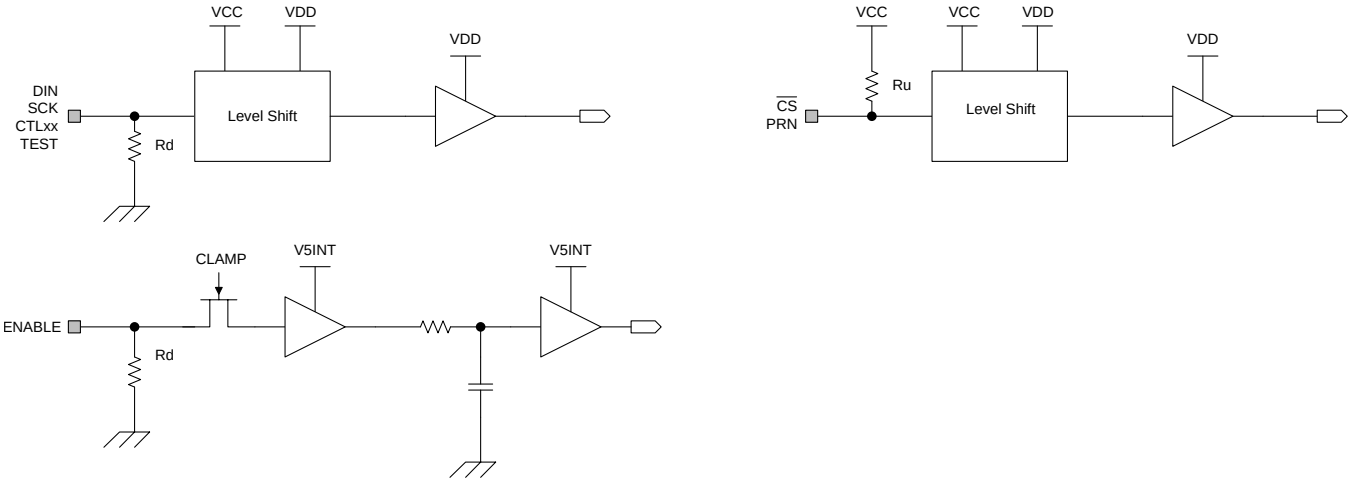

* V5INT is the internal power supply.

Figure 19. Input Buffer1 Block Diagram

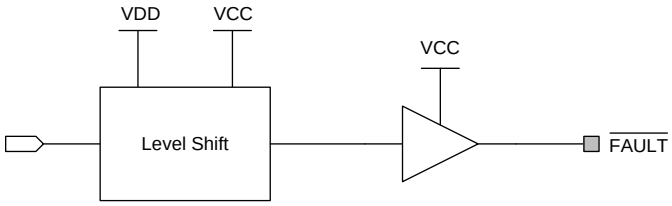

Figure 20. Output Buffer1 Block Diagram

Feature Description (continued)

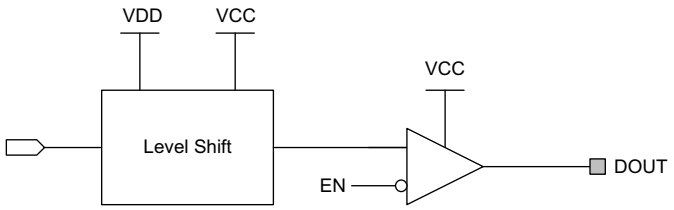

Figure 21. Output Buffer2 Block Diagram

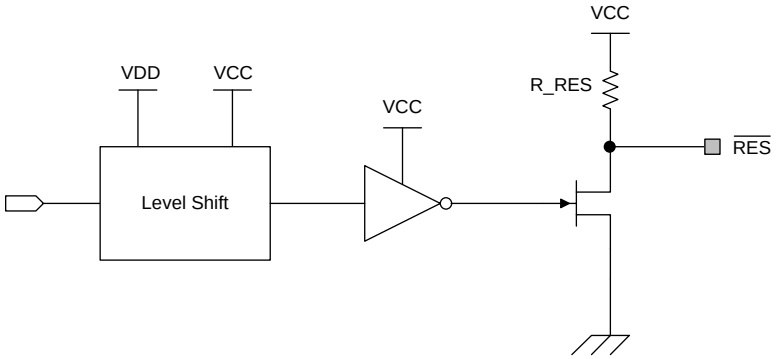

Figure 22. Output Buffer3 Block Diagram

Table 1. Recommended Pin Termination

PIN NAME	DESCRIPTION	TERMINATION
TEST	Test mode input	OPEN

7.2.12 Fault Detection

Table 2. Fault Detection

ITEMS	SPI FLTFLG	Pre Driver(1)	FAULT(2)	RES	Others
VB - Overvoltage	VBOV	Disable	L	H	
VB - Undervoltage	VBUV	Disable	L	H	
CP - Overvoltage	CPOV	Disable	L	H	
CP - Undervoltage	CPUV	Disable	L	H	
VCC - Overvoltage	VCCOV	Disable	L	H	
VCC - Under Voltage	-	Disable(3)	H	L	
VCC - Overcurrent	VCCOC	Disable	L	H	
Motor - Overcurrent	MTOC	Disable	L	H	
VDD - Overvoltage	VDDOV	Disable	L	H	
VDD - Undervoltage	-	Disable(3)	H	L	
Thermal shutdown	TSD	Disable	L	H	
Watch Dog	-	-	H	L	
Clock Monitor	-	-	H	L	
SPI format error	-	-	H	H	SPI serial out error bit

(1) Pre-driver is disabled if the conditions occur and SDNEN register bits are 1.
(2) $\overline{\text{FAULT}}$ pin is asserted to low if the conditions occur and FLTEN register bits are 1.
(3) Pre-driver is disabled by VCC undervoltage and VDD undervoltage conditions regardless of SPI register setting.

7.3 Register Maps

7.3.1 Register Descriptions

Access type: R = Read and W = Write.
Reserved register: Read of reserved bits return 0 and write has no effect.

Table 3. CFGUNLK (Address 0x01): Configuration Unlock Register

Bit	Name	Type	Reset	Description
3:0	CFGUNLK	RW	0000	DRV3204E-Q1 SPI register map has lock and unlock mode, and it is in lock mode by default. MCU can write values of the following registers in unlock mode; ● FLTCFG ● FLTEN0 and FLTEN1 ● SDNEN0 and SDNEN1 ● CSCFG ● PDCFG ● WDCFG In lock mode, read returns the values, but writing the registers have no effect. Device enters unlock mode by writing 0x5, 0x8, 0x7 to CFGUNLK register in series. Device exits from unlock mode by writing 0x0.

Table 4. FLTCFG (Address 0x02): Fault Detection Configuration Register

Bit	Name	Type	Reset	Description
7	FLGLATCH_EN	RW	0	Fault-flag (FLTFLG*) latch enable 0: Fault events do not latch fault-flag register bits. 1: Latching of fault-flag register bits by the fault events occurs. The flag bits remain asserted until cleared.
6:4	MTOCTH	RW	000	Motor overcurrent detection threshold (ADTH) 000: 2 V 001: 2.5 V 010: 3 V 011: 3.5 V 100: 4 V Others: 2 V
3	RSVD	R	0	Reserved
2	VCCUVTH	RW	0	VCC undervoltage detection threshold 0: 4 V 1: 4.2 V
1:0	VBUVTH	RW	00	VB undervoltage detection threshold 00: 4 V 01: 4.5 V 10: 5 V 11: 5.5 V

Table 5. FLTEN0 (Address 0x04): $\overline{\text{FAULT}}$ Pin Enable Register 0

Bit	Name	Type	Reset	Description
7	FE_MTOC	RW	1	$\overline{\text{FAULT}}$ pin enable of FLTFLG0 register bits. 0: Assertion of the $\overline{\text{FAULT}}$ pin does not occur when the fault flag bit is 1 1: Assertion of the $\overline{\text{FAULT}}$ pin to low level occurs when the fault flag bit is 1. See Figure 23
6	FE_VCCOC	RW	1	
5	FE_VCCOV	RW	1	
4	FE_VDDOV	RW	1	
3	FE_CPOV	RW	1	
2	FE_CPUV	RW	1	
1	FE_VBOV	RW	1	
0	FE_VBUV	RW	1	

Table 6. FLTEN1 (Address 0x05): $\overline{\text{FAULT}}$ Pin Enable Register 1

Bit	Name	Type	Reset	Description
7:1	RSVD	R	0000 000	Reserved
0	FE_TSD	RW	1	$\overline{\text{FAULT}}$ pin enable of TSD flag bit 0: Assertion of the $\overline{\text{FAULT}}$ pin does not occur when the fault flag bit is 1 1: Assertion of the $\overline{\text{FAULT}}$ pin to low level occurs when the TSD flag bit is 1. See Figure 23

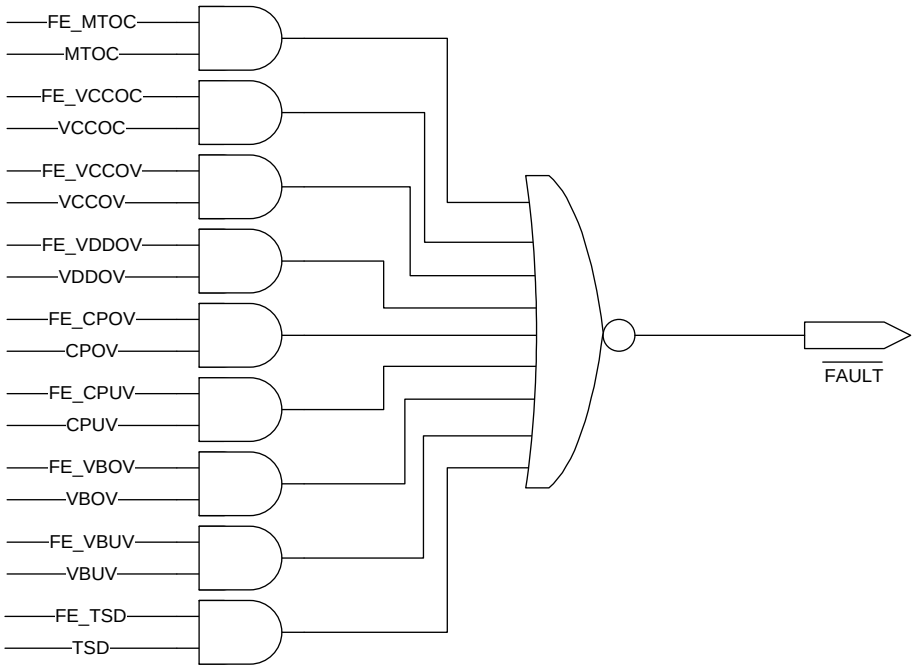

Figure 23. $\overline{\text{FAULT}}$ Pin Enable Logic

Table 7. SDNEN0 (Address 0x06): Pre-Driver Shutdown Enable Register 0

Bit	Name	Type	Reset	Description
7	SE_MTOC	RW	1	Pre-driver shutdown enable of FLTFLG0 register bits 0: Disabling of the pre-driver outputs does not occur when the fault flag bit is 1. 1: Disabling of the pre-driver outputs occurs when the fault flag bit is 1. Both the high-side and low-side FETs turn off. See Figure 24.
6	SE_VCCOC	RW	1	
5	SE_VCCOV	RW	1	
4	SE_VDDOV	RW	1	
3	SE_CPOV	RW	1	
2	SE_CPUV	RW	1	
1	SE_VBOV	RW	1	
0	SE_VBUV	RW	1	

Table 8. SDNEN1 (Address 0x07): Pre-Driver Shutdown Enable Register 1

Bit	Name	Type	Reset	Description
7:1	RSVD	R	0000 000	Reserved
0	SE_TSD	RW	1	Pre-driver shutdown enable of TSD flag bits 0: Disabling of the pre-driver outputs does not occur when the TSD flag bit is 1. 1: Disabling of the pre-driver outputs occurs when the TSD flag bit is 1. Both the high-side and low-side FETs turn off. See Figure 24.

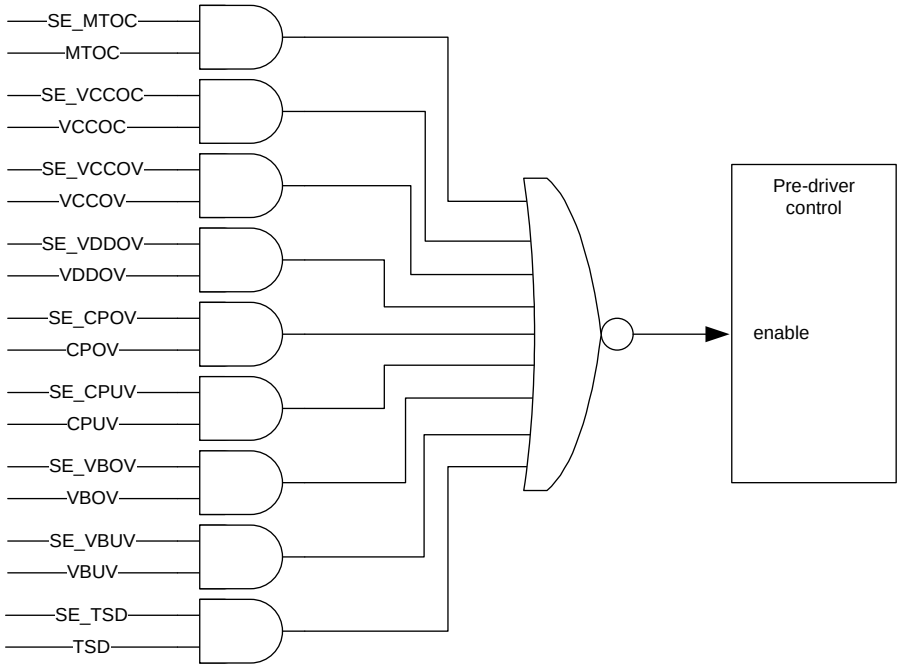

Figure 24. Pre-Driver Shutdown Logic

Table 9. FLTFLG0 (Address 0x08): Fault Flag Register 0

Bit	Name	Type[(1)]	Reset	Description
				Fault flag bits of the following conditions;[(2)]
7	MTOC	RW	0	MTOC: Motor overcurrent. (OVAD)
6	VCCOC	RW	0	VCCOC: VCC overcurrent
5	VCCOV	RW	0	VCCOV: VCC overvoltage
4	VDDOV	RW	0	VDDOV: VDD overvoltage
3	CPOV	RW	0	CPOV: Charge-pump overvoltage
2	CPUV	RW	0	CPUV: Charge-pump undervoltage
1	VBOV	RW	0	VBOV: VB overvoltage
0	VBUV	RW	0	VBUV: VB undervoltage If FLTCFG.FLGLATCH_EN = 1 0: Read = No fault condition exists since last cleared. Write = No effect 1: Read = Fault condition exists. Write = Clear the flag. If FLTCFG.FLGLATCH_EN = 0 0: Read = No fault condition Write = No effect 1: Read = Fault condition Write = No effect

(1) R: Read, W: Write
(2) Assertion of the fault flags may occur during power up.

Table 10. FLGFLT1 (Address 0x09): Fault Flag Register 1

Bit	Name	Type (1)	Reset	Description
7:1	RSVD	R	0000 000	Reserved
0	VBUV	RW	1	Fault flag bit of thermal shutdown condition. (2) If FLTCFG.FLGLATCH_EN = 1 0: Read = No fault condition exists since last cleared. Write = No effect 1: Read = Fault condition exists. Write = Clear the flag If FLTCFG.FLGLATCH_EN = 0 0: Read = No fault condition Write = No effect 1: Read = Fault condition Write = No effect

(1) R: Read, W: Write
(2) Assertion of the fault flags may occur during power up.

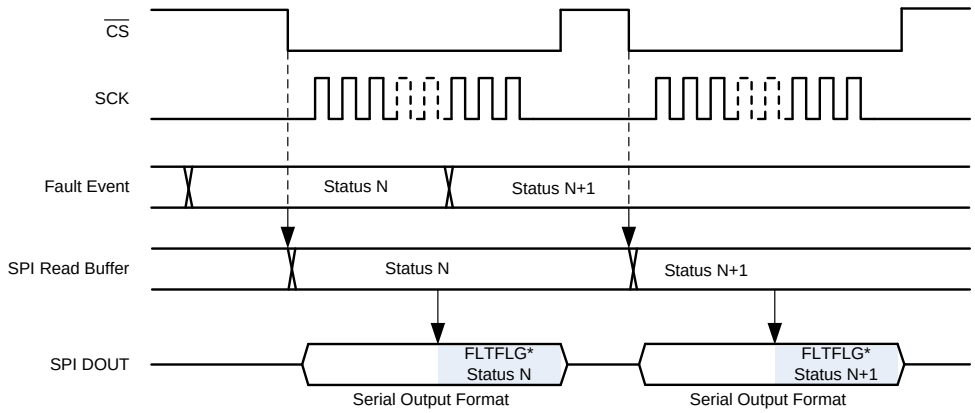

Figure 25. SPI Data-Out Timing Chart of Fault Flag Registers

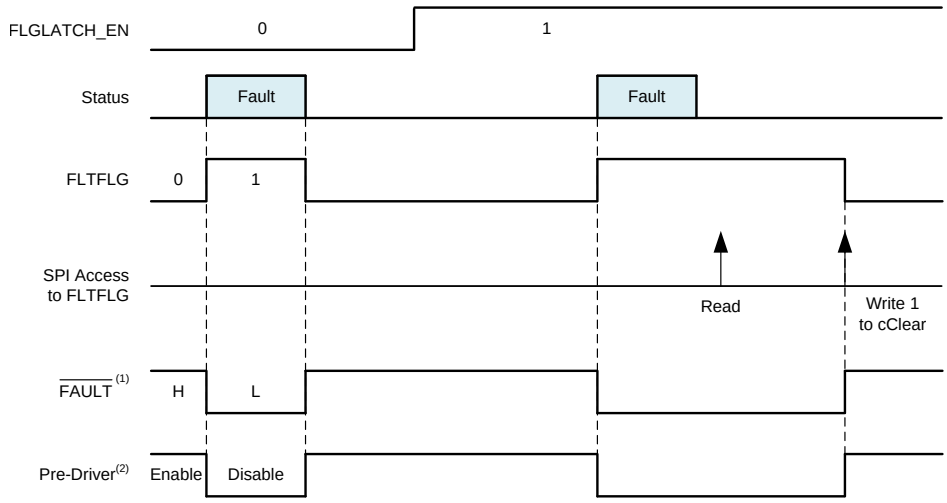

(1) Assertion of $\overline{\text{FAULT}}$ occurs if FLTEN = 1.
(2) Disabling of pre-driveroccurs if SDNEN = 1.

Figure 26. FLGFLG and FLGLATCH_EN

Table 11. CSCFG (Address 0x0A): Current Sense Configuration Register

Bit	Name	Type(1)	Reset	Description
7:3	RSVD	R	0000 0	Reserved
2:0	CSOFFSET	RW	000	Current-sense offset 000: 0.5 V 001: 1 V 010: 1.5 V 011: 2 V 100: 2.5 V Others: 0.5 V

(1) R: Read W: Write

Table 12. PDCFG (Address 0x0B): Pre-Driver Configuration Register

Bit	Name	Type(1)	Reset	Description
7:2	RSVD	R	0000 00	Reserved
1:0	DEADT	RW	00	Dead time (= t_{dead}) 00: 2.1 µs 01: 1.6 µs 10: 1.1 µs 11: 0.6 µs The actual dead time has ±0.1 µs variation from the typical value.

(1) R: Read W: Write

Table 13. DIAG (Address 0x0C): Diagnosis Register

Bit	Name	Type	Reset	Description
7:3	RSVD	R	0000 0	Reserved
2	VCCUVRST	R	0	nRES reset source information
1	WDTRST	R	0	Bit 2 = VCCUVRST - VCC undervoltage
0	CMRST	R	0	Bit 1 = WDTRST - watchdog timer Bit 0 = CMRST - clock monitor 0: Read = Reset has not occurred. Write = No effect 1: Read = A corresponding reset source caused the last reset condition. Write = No effect Read access to this register clears the bits.

Table 14. SPARE (Address 0x0D): Spare Register

Bit	Name	Type(1)	Reset	Description
7:2	SPARE	RW	0000 00	Spare registers for future use. Read and write have no effect.
1:0	SEL_COMP_HYS	RW	00	Select phase comparator hysteresis voltage. The following show the typical values. 00: 0 V 01: 25 mV 10: 50 mV 11: 100 mV

(1) R: Read W: Write

Table 15. SPI Serial Input Format

	MSB	D14	D13	D12	D11	D10	D9	D8
DIN	RW[1]	RW[0]	Addr[5]	Addr[4]	Addr[3]	Addr[2]	Addr[1]	Addr[0]
	D7	D6	D5	D4	D3	D2	D1	LSB
DIN	Data[7]	Data[6]	Data[5]	Data[4]	Data[3]	Data[2]	Data[1]	Data[0]

Table 16. SPI Serial Output Data Format

	MSB	D14	D13	D12	D11	D10	D9	D8
DOUT	0	Frame fault	0	0	0	0	0	1
	D7	D6	D5	D4	D3	D2	D1	LSB
DOUT	Data[7]	Data[6]	Data[5]	Data[4]	Data[3]	Data[2]	Data[1]	Data[0]

SPI serial input and output format

RW[1:0] : 01: write mode; 00: read mode

Addr[5:0] : Address of SPI access

Data[7:0] : Input data to write or output data to read

Frame fault : 0: No error exists in the previous SPI frame.

: 1: Error exists in the previous SPI frame.

Table 17. SPI Register Map

Register Name	Addr (Hex)	b7	b6	b5	b4	b3	b2	b1	b0	Reset (Hex)
Reserved	00	RSVD								00
CFGUNLK	01	RSVD				CFGUNLK				00
FLTCFG	02	FLGLATCH_EN	MTOCTH			RSVD	VCCUVTH	VBUVTH		00
Reserved	03	RSVD								00
FLTEN0	04	FE_MTOC	FE_VCCOC	FE_VCCOV	FE_VDDOV	FE_CPOV	FE_CPUV	FE_VBOV	FE_VBUV	FF
FLTEN1	05	RSVD							FE_TSD	01
SDNEN0	06	SE_MTOC	SE_VCCOC	SE_VCCOV	SE_VDDOV	SE_CPOV	SE_CPUV	SE_VBOV	SE_VBUV	FF
SDNEN1	07	RSVD							SE_TSD	01
FLTFLG0	08	MTOC	VCCOC	VCCOV	VDDOV	CPOV	CPUV	VBOV	VBUV	00
FLTFLG1	09	RSVD							TSD	00
CSCFG	0A	RSVD					CSOFFSET			00
PDCFG	0B	RSVD						DEADT		00
DIAG	0C	RSVD					VCCUVRST	WDTRST	CMRST	00
SPARE	0D	SPARE						SEL_COMP_HYS		00
Reserved	0E-3F	RSVD								00

8 Application and Implementation

NOTE

Information in the following applications sections is not part of the TI component specification, and TI does not warrant its accuracy or completeness. TI's customers are responsible for determining suitability of components for their purposes. Customers should validate and test their design implementation to confirm system functionality.

8.1 Typical Application

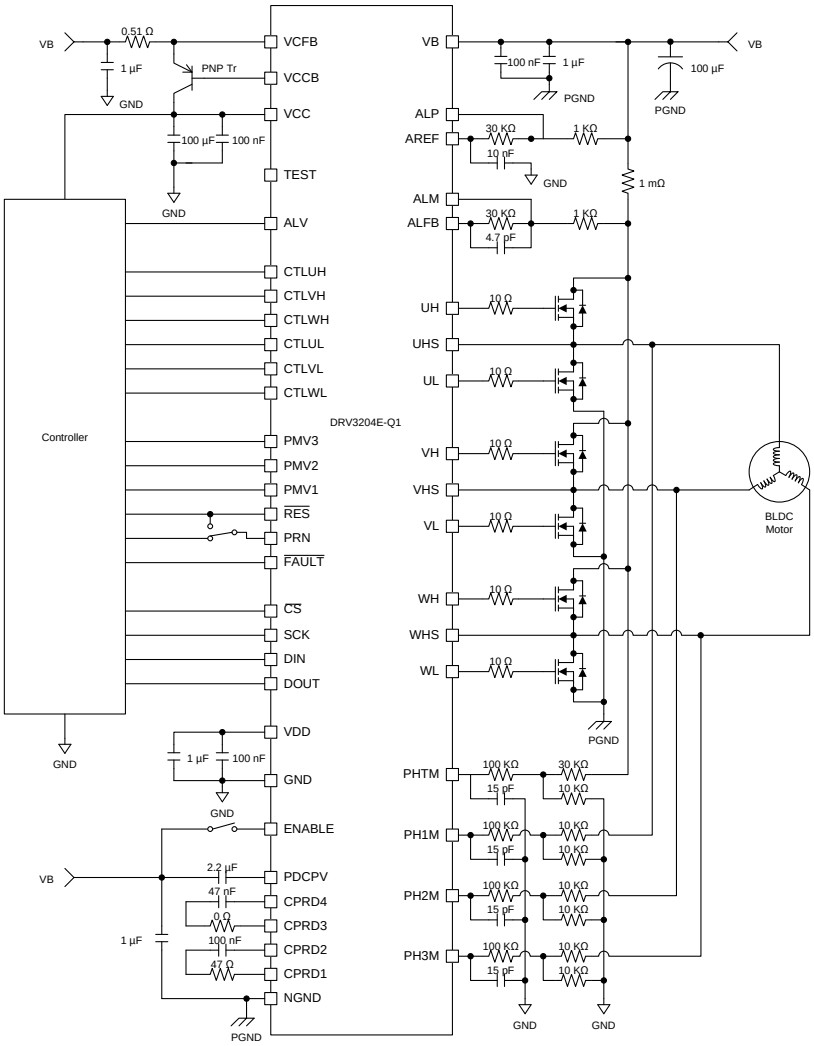

Figure 27. Typical Application Schematic

9 Device and Documentation Support

9.1 Receiving Notification of Documentation Updates

To receive notification of documentation updates, navigate to the device product folder on ti.com. In the upper right corner, click on *Alert me* to register and receive a weekly digest of any product information that has changed. For change details, review the revision history included in any revised document.

9.2 Community Resources

The following links connect to TI community resources. Linked contents are provided "AS IS" by the respective contributors. They do not constitute TI specifications and do not necessarily reflect TI's views; see TI's Terms of Use.

TI E2E™ Online Community ***TI's Engineer-to-Engineer (E2E) Community.*** Created to foster collaboration among engineers. At e2e.ti.com, you can ask questions, share knowledge, explore ideas and help solve problems with fellow engineers.

Design Support ***TI's Design Support*** Quickly find helpful E2E forums along with design support tools and contact information for technical support.

9.3 Trademarks

E2E is a trademark of Texas Instruments.
All other trademarks are the property of their respective owners.

9.4 Electrostatic Discharge Caution

These devices have limited built-in ESD protection. The leads should be shorted together or the device placed in conductive foam during storage or handling to prevent electrostatic damage to the MOS gates.

9.5 Glossary

SLYZ022 — *TI Glossary*.

This glossary lists and explains terms, acronyms, and definitions.

10 Mechanical, Packaging, and Orderable Information

The following pages include mechanical, packaging, and orderable information. This information is the most current data available for the designated devices. This data is subject to change without notice and revision of this document. For browser-based versions of this data sheet, refer to the left-hand navigation.

PACKAGING INFORMATION

Orderable Device	Status (1)	Package Type	Package Drawing	Pins	Package Qty	Eco Plan (2)	Lead/Ball Finish (6)	MSL Peak Temp (3)	Op Temp (°C)	Device Marking (4/5)	Samples
DRV3204EPHPQ1	NRND	HTQFP	PHP	48	250	Green (RoHS & no Sb/Br)	CU NIPDAU	Level-3-260C-168 HR	-40 to 150	DRV3204E	
DRV3204EPHPRQ1	NRND	HTQFP	PHP	48	1000	Green (RoHS & no Sb/Br)	CU NIPDAU	Level-3-260C-168 HR	-40 to 150	DRV3204E	

(1) The marketing status values are defined as follows:
ACTIVE: Product device recommended for new designs.
LIFEBUY: TI has announced that the device will be discontinued, and a lifetime-buy period is in effect.
NRND: Not recommended for new designs. Device is in production to support existing customers, but TI does not recommend using this part in a new design.
PREVIEW: Device has been announced but is not in production. Samples may or may not be available.
OBSOLETE: TI has discontinued the production of the device.

(2) Eco Plan - The planned eco-friendly classification: Pb-Free (RoHS), Pb-Free (RoHS Exempt), or Green (RoHS & no Sb/Br) - please check http://www.ti.com/productcontent for the latest availability information and additional product content details.
TBD: The Pb-Free/Green conversion plan has not been defined.
Pb-Free (RoHS): TI's terms "Lead-Free" or "Pb-Free" mean semiconductor products that are compatible with the current RoHS requirements for all 6 substances, including the requirement that lead not exceed 0.1% by weight in homogeneous materials. Where designed to be soldered at high temperatures, TI Pb-Free products are suitable for use in specified lead-free processes.
Pb-Free (RoHS Exempt): This component has a RoHS exemption for either 1) lead-based flip-chip solder bumps used between the die and package, or 2) lead-based die adhesive used between the die and leadframe. The component is otherwise considered Pb-Free (RoHS compatible) as defined above.
Green (RoHS & no Sb/Br): TI defines "Green" to mean Pb-Free (RoHS compatible), and free of Bromine (Br) and Antimony (Sb) based flame retardants (Br or Sb do not exceed 0.1% by weight in homogeneous material)

(3) MSL, Peak Temp. - The Moisture Sensitivity Level rating according to the JEDEC industry standard classifications, and peak solder temperature.

(4) There may be additional marking, which relates to the logo, the lot trace code information, or the environmental category on the device.

(5) Multiple Device Markings will be inside parentheses. Only one Device Marking contained in parentheses and separated by a "~" will appear on a device. If a line is indented then it is a continuation of the previous line and the two combined represent the entire Device Marking for that device.

(6) Lead/Ball Finish - Orderable Devices may have multiple material finish options. Finish options are separated by a vertical ruled line. Lead/Ball Finish values may wrap to two lines if the finish value exceeds the maximum column width.

In no event shall TI's liability arising out of such information exceed the total purchase price of the TI part(s) at issue in this document sold by TI to Customer on an annual basis.

PHP (S–PQFP–G48) PowerPAD™ PLASTIC QUAD FLATPACK

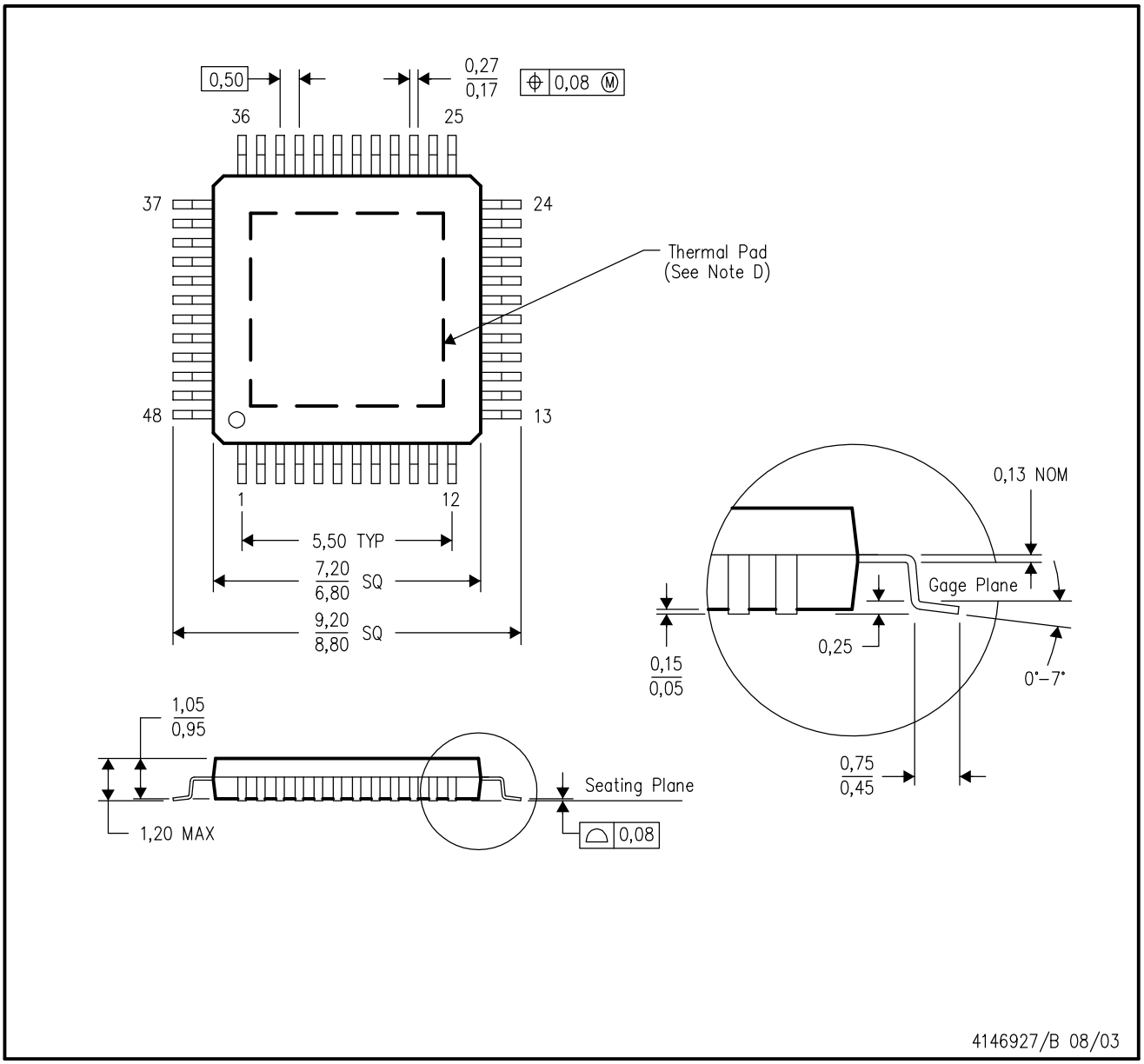

NOTES:
- A. All linear dimensions are in millimeters.
- B. This drawing is subject to change without notice.
- C. Body dimensions do not include mold flash or protrusion
- D. This package is designed to be soldered to a thermal pad on the board. Refer to Technical Brief, PowerPad Thermally Enhanced Package, Texas Instruments Literature No. SLMA002 for information regarding recommended board layout. This document is available at www.ti.com <http://www.ti.com>.
- E. Falls within JEDEC MS–026

PowerPAD is a trademark of Texas Instruments.

PHP (S–PQFP–G48) PowerPAD™ PLASTIC QUAD FLATPACK

THERMAL INFORMATION

This PowerPAD™ package incorporates an exposed thermal pad that is designed to be attached to a printed circuit board (PCB). The thermal pad must be soldered directly to the PCB. After soldering, the PCB can be used as a heatsink. In addition, through the use of thermal vias, the thermal pad can be attached directly to the appropriate copper plane shown in the electrical schematic for the device, or alternatively, can be attached to a special heatsink structure designed into the PCB. This design optimizes the heat transfer from the integrated circuit (IC).

For additional information on the PowerPAD package and how to take advantage of its heat dissipating abilities, refer to Technical Brief, PowerPAD Thermally Enhanced Package, Texas Instruments Literature No. SLMA002 and Application Brief, PowerPAD Made Easy, Texas Instruments Literature No. SLMA004. Both documents are available at www.ti.com.

The exposed thermal pad dimensions for this package are shown in the following illustration.

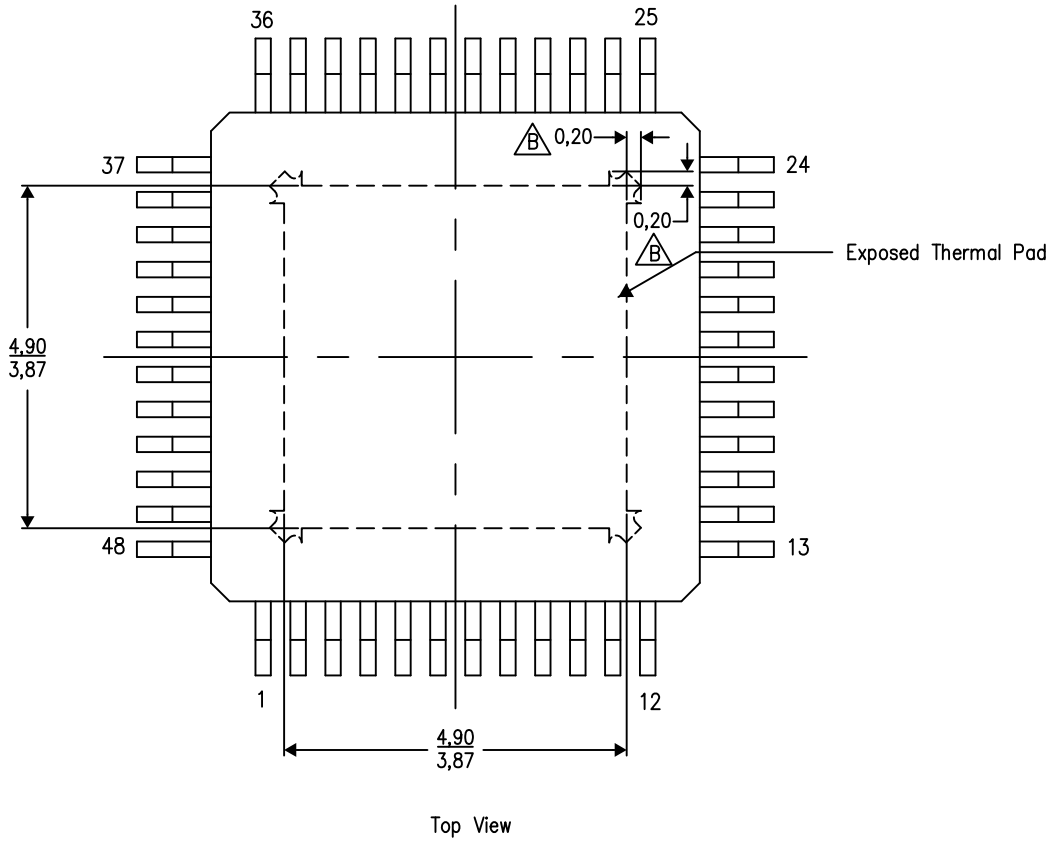

Exposed Thermal Pad Dimensions

4206329–4/P 03/15

NOTE: A. All linear dimensions are in millimeters

B Tie strap features may not be present.

PowerPAD is a trademark of Texas Instruments

PHP (S–PQFP–G48) PowerPAD™ PLASTIC QUAD FLATPACK

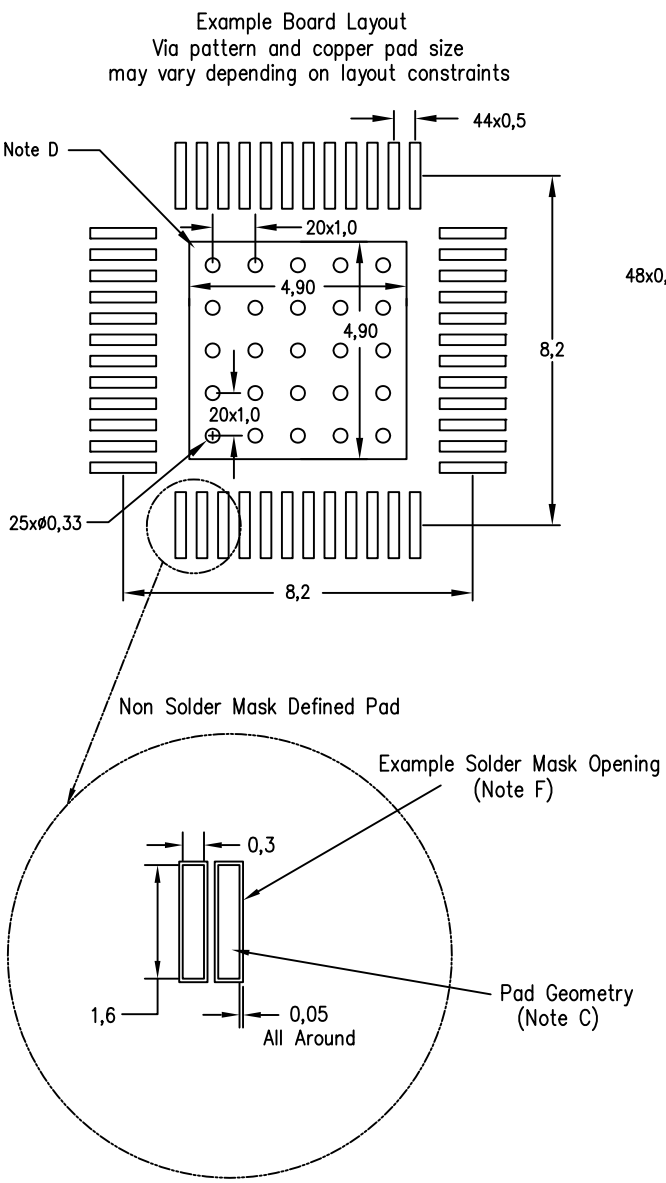

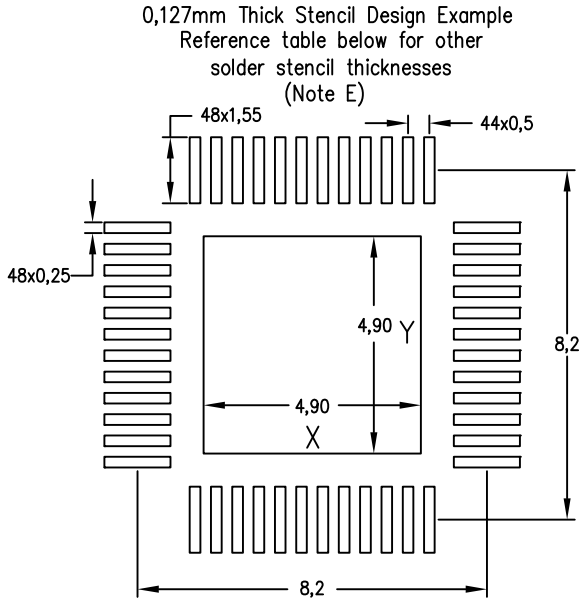

Center Power Pad Solder Stencil Opening		
Stencil Thickness	X	Y
0.1mm	5.20	5.20
0.127mm	4.90	4.90
0.152mm	4.50	4.50
0.178mm	4.25	4.25

4207626–4/I 10/15

NOTES:
- A. All linear dimensions are in millimeters.
- B. This drawing is subject to change without notice.
- C. Publication IPC–7351 is recommended for alternate designs.
- D. This package is designed to be soldered to a thermal pad on the board. Refer to Technical Brief, PowerPad Thermally Enhanced Package, Texas Instruments Literature No. SLMA002, SLMA004, and also the Product Data Sheets for specific thermal information, via requirements, and recommended board layout. These documents are available at www.ti.com <http://www.ti.com>.
- E. Laser cutting apertures with trapezoidal walls and also rounding corners will offer better paste release. Customers should contact their board assembly site for stencil design recommendations. Refer to IPC 7525 for stencil design considerations.
- F. Customers should contact their board fabrication site for recommended solder mask tolerances and via tenting options for vias placed in the thermal pad.

PowerPAD is a trademark of Texas Instruments